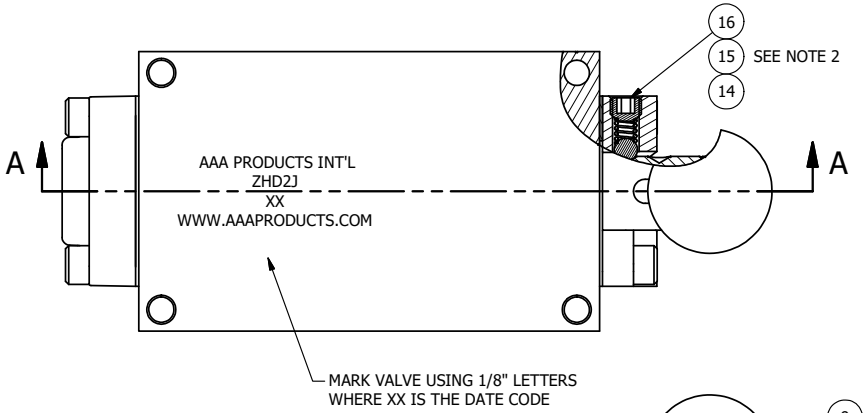

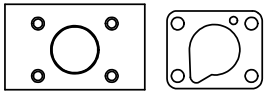

POSITION GASKET ON END OF VALVE SO
MOUNTING HOLES ALIGN
BOTH ENDS (SIDE 'A' SHOWN)

NOTES:
1) ALWAYS GIVE VALVE MODEL, AND PART NUMBER WHEN ORDERING PARTS.
2) LUBRICATE DETENT BALL, SPRING AND CLEVIS.

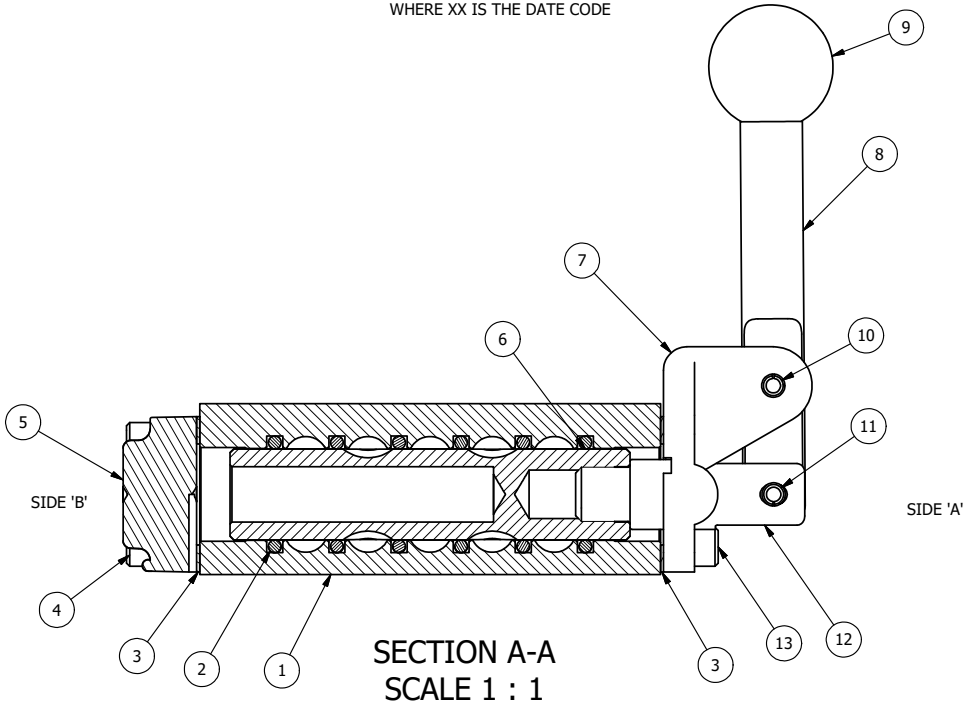

SECTION A-A
SCALE 1 : 1
VIEW FROM 3 PORT SIDE

FLG	QTY	PART NO	DESCRIPTION
16	1	V-21-SS	SCREW, 1/4-20 X 3/16, SOCKET SET, CUP POINT, 18-8 SS
15	1	DS3-1	SPRING, DETENT, STAINLESS, 1/4" & 3/8" VALVE. LEE SPRING # LC 029B 0 S.
14	1	V-14-SS	BALL, 440C STAINLESS STEEL, 3/16 DIA. FOR DETENT
13	4	V-162-SS	SCREW, 10-24 X 5/8, SOCKET HEAD CAP, STAINLESS STEEL
12	1	HC3-3	CLEVIS - 3 POS. DETENT, STAINLESS, 1/4" & 3/8" VALVE
11	1	V-48-SS	PIN, ROLL 3/16 X 9/16 18-8 STAINLESS
10	1	V-508-SS	PIN, ROLL 3/16 X 5/8", 18-8 SS
9	1	V-521	KNOB, RED (BRASS 3/8-16 INSERT), 1" DIA BALL, 1/4" & 3/8" VALVE
8	1	HL3-SS	HAND LEVER, 303 STAINLESS STEEL, 1/4" & 3/8" VALVE
7	1	HE3-5D	END CAP, LEVER, DETENT, 303 STAINLESS STEEL, 1/4" & 3/8" VALVE
6	1	S3	SPOOL - STANDARD, 2 POS, CLSD CTR, 1/4" & 3/8" VALVE
5	1	SEC3-3	END CAP, VENTED, STAINLESS STEEL, 1/4" & 3/8" VALVES
4	4	V-38-SS	SCREW, 10-24 X 3/4, SOCKET HEAD CAP, 18-8 SS
3	2	ECG3	GASKET - END CAP, 1/4" & 3/8" VALVE
2	6	V-39	O-RING, VITON, STD BODY, 1/4" & 3/8" VALVES
1	1	ZB2-2	BODY - BRASS, NO PILOTS, 1/4" SIDE PORT VALVE

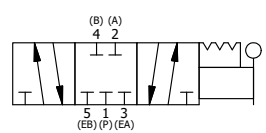

LIMITS ON DIMENSIONS UNLESS OTHERWISE SPECIFIED
2-PL DECIMAL ± .01
3-PL DECIMAL ± .005
FRACTIONAL ± 1/64
ANGULAR ± 1/2°

AAA PRODUCTS INTERNATIONAL
7114 Harry Hines Blvd
Dallas, TX 75235

DRAWN: RMcKenna	DATE: 9/16/2015	CHECKED: KWaite	DATE: 9/16/2015
SCALE: 1 : 1	SHEET: 1 OF 1	RELEASED: HWomack	DATE: 9/16/2015

TITLE: 1/4" SIDE PORT, LEVER, 3 POS, DETENT, LEVER SHFT, CLSD CTR SPL, BRASS & STAINLESS, RED KNOB

PART NO.: ZHD2J

REV.:

THE INFORMATION CONTAINED WITHIN THIS DOCUMENT IS PROPRIETARY TO AAA PRODUCTS AND MAY NOT BE DISCLOSED WITHOUT PRIOR WRITTEN CONSENT

D:\Engineering\Product\Valves\Assembly\Lever\HD\DWG\ZHD2J.idw