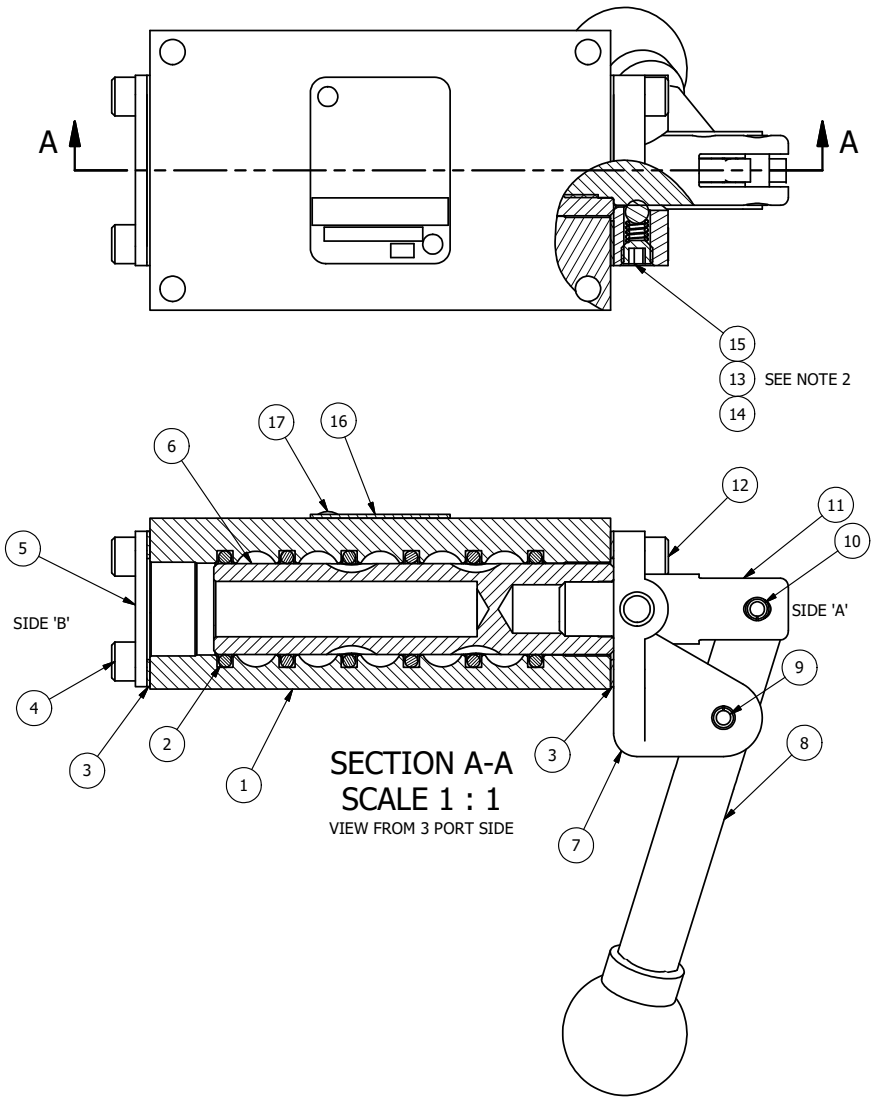

SECTION A-A
SCALE 1 : 1
VIEW FROM 3 PORT SIDE

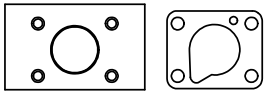

POSITION GASKET ON END OF VALVE SO
MOUNTING HOLES ALIGN
BOTH ENDS (SIDE 'A' SHOWN)

NOTES:
1) ALWAYS GIVE VALVE MODEL, AND PART NUMBER WHEN ORDERING PARTS.
2) LUBRICATE DETENT BALL, SPRING AND CLEVIS.

FLG	QTY	PART NO	DESCRIPTION
17	2	V-212	SCREW, #2 X 3/16 DRIVE, TYPE U, OVAL HEAD, STAINLESS STEEL
16	1	AN-114	NAMEPLATE, BLANK, FOR VALVES WITH SPRINGS OR DETENTS
15	1	V-21	SCREW, 1/4-20 X 3/16, SOCKET SET, CUP POINT
14	1	DS3	SPRING - DETENT, 1/4" & 3/8" VALVE
13	1	V-14	BALL, CHROME STEEL 3/16 DIA, GRADE 25, FOR DETENT
12	4	V-162	SCREW, 10-24 X 5/8, SOCKET HEAD CAP
11	1	HC3-2	CLEVIS - POS. A & C DETENTS, 1/4" & 3/8" VALVE
10	1	V-48	PIN, ROLL 3/16 X 9/16, STEEL, ZINC PLATED
9	1	V-508	PIN, ROLL 3/16 X 5/8 ZINC PLATED STEEL FOR 1/4 FOOT ENDCAP
8	1	HL3-24B20	HAND LEVER WITH KNOB, BENT 20 DEG SIDEWAYS, 1/4" & 3/8" VALVES
7	1	HE3-5D	END CAP, LEVER, DETENT, 303 STAINLESS STEEL, 1/4" & 3/8" VALVE
6	1	S3	SPOOL - STANDARD, 2 POS, CLSD CTR, 1/4" & 3/8" VALVE
5	1	SEC3	END CAP, 304 STAINLESS STEEL, 1/4" & 3/8" VALVE
4	4	V-37	SCREW, 10-24 X 1/2, SOCKET HEAD CAP
3	2	ECG3	GASKET - END CAP, 1/4" & 3/8" VALVE
2	6	V-39	O-RING, VITON, STD BODY, 1/4" & 3/8" VALVES
1	1	B2-2E	BODY - SOLID, PLAIN, NO PILOTS, ANODIZED, 1/4" SIDE PORT VALVE

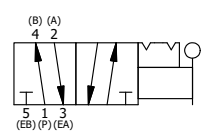

LIMITS ON DIMENSIONS UNLESS OTHERWISE SPECIFIED
2-PL DECIMAL ± .01
3-PL DECIMAL ± .005
FRACTIONAL ± 1/64
ANGULAR ± 1/2°

AAA PRODUCTS INTERNATIONAL
7114 Harry Hines Blvd
Dallas, TX 75235

DRAWN: RMcKenna	DATE: 12/29/2022	CHECKED: KWaite	DATE: 12/29/2022
SCALE: 1 : 1	SHEET: 1 OF 1	RELEASED: HWomack	DATE: 12/29/2022

TITLE:
1/4" SIDE PORT, LEVER, 32POS, DETENT, LVR RTRN, BENT LVR LFT, HVY DUTY, 180D LVR, STAINLESS

PART NO.: HD2BLHQT

REV.:

THE INFORMATION CONTAINED WITHIN THIS DOCUMENT IS PROPRIETARY TO AAA PRODUCTS AND MAY NOT BE DISCLOSED WITHOUT PRIOR WRITTEN CONSENT

D:\Engineering\Product\valves\Assembly\lever\HD1BLWG\HD2BLHQT.dw