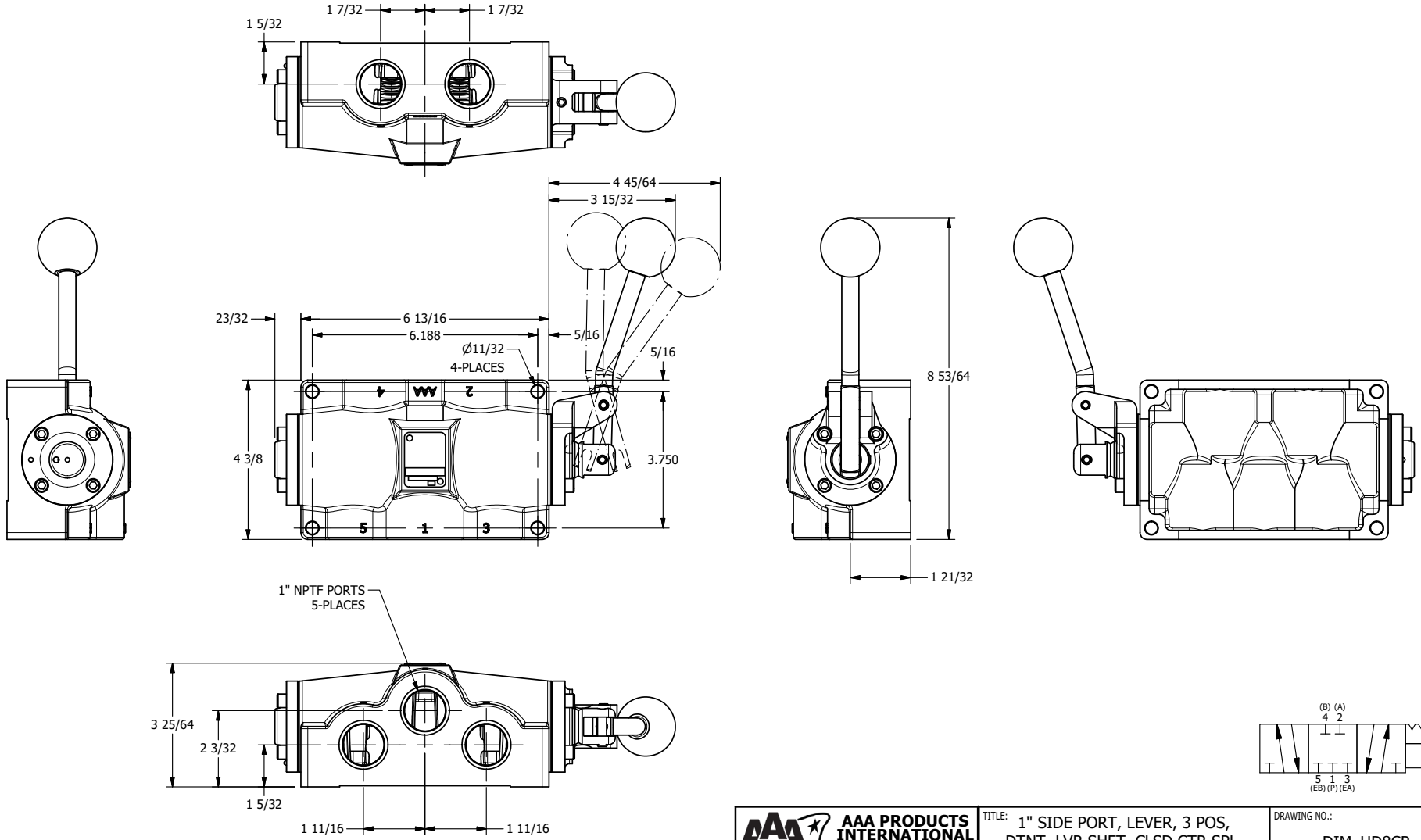

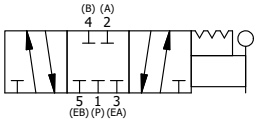

AAA PRODUCTS INTERNATIONAL
7114 Harry Hines Blvd
Dallas, TX 75235

TITLE: 1" SIDE PORT, LEVER, 3 POS, DTNT, LVR SHFT, CLSD CTR SPL, CRVD LVR, 90D LVR

DRAWING NO.: DIM_HD8CR

THE INFORMATION CONTAINED WITHIN THIS DOCUMENT IS PROPRIETARY TO AAA PRODUCTS AND MAY NOT BE DISCLOSED WITHOUT PRIOR WRITTEN CONSENT