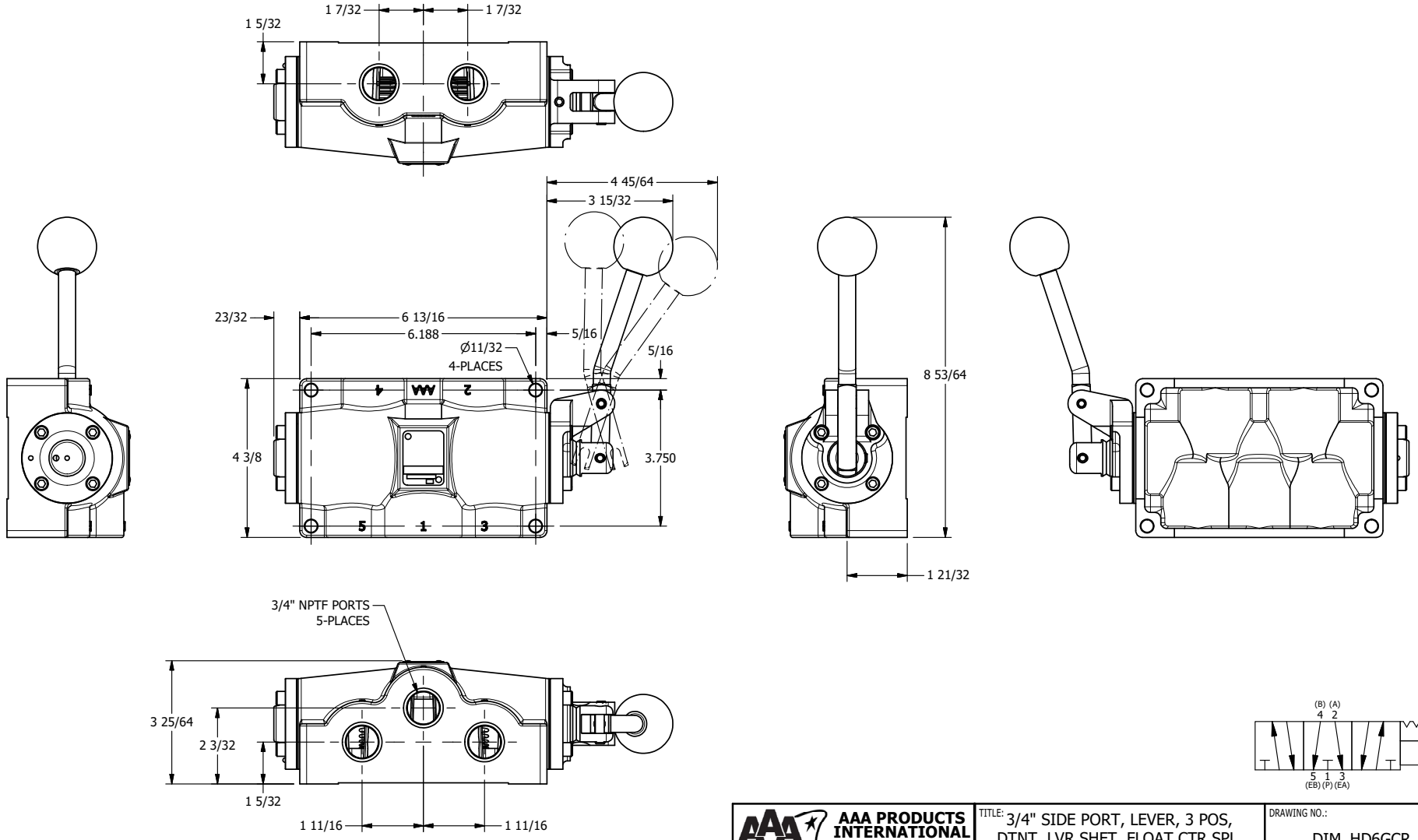

AAA PRODUCTS INTERNATIONAL
7114 Harry Hines Blvd
Dallas, TX 75235

TITLE: 3/4" SIDE PORT, LEVER, 3 POS, DTNT, LVR SHFT, FLOAT CTR SPL, CRVD LVR, 90D LVR

DRAWING NO.: DIM_HD6GCR

THE INFORMATION CONTAINED WITHIN THIS DOCUMENT IS PROPRIETARY TO AAA PRODUCTS AND MAY NOT BE DISCLOSED WITHOUT PRIOR WRITTEN CONSENT