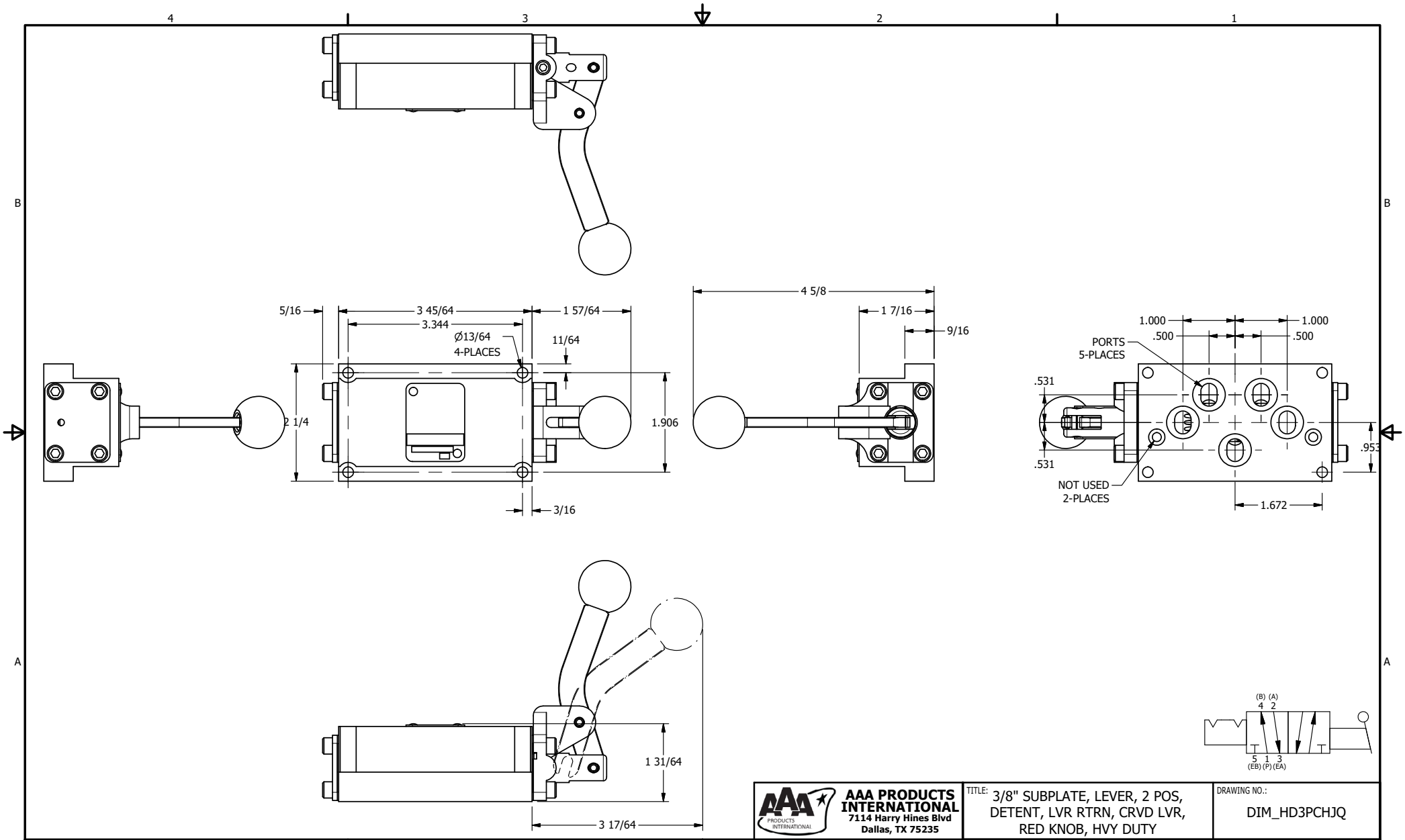

AAA PRODUCTS INTERNATIONAL
7114 Harry Hines Blvd
Dallas, TX 75235

TITLE: 3/8" SUBPLATE, LEVER, 2 POS, DETENT, LVR RTRN, CRVD LVR, RED KNOB, HVY DUTY

DRAWING NO.: DIM_HD3PCHJQ

THE INFORMATION CONTAINED WITHIN THIS DOCUMENT IS PROPRIETARY TO AAA PRODUCTS AND MAY NOT BE DISCLOSED WITHOUT PRIOR WRITTEN CONSENT