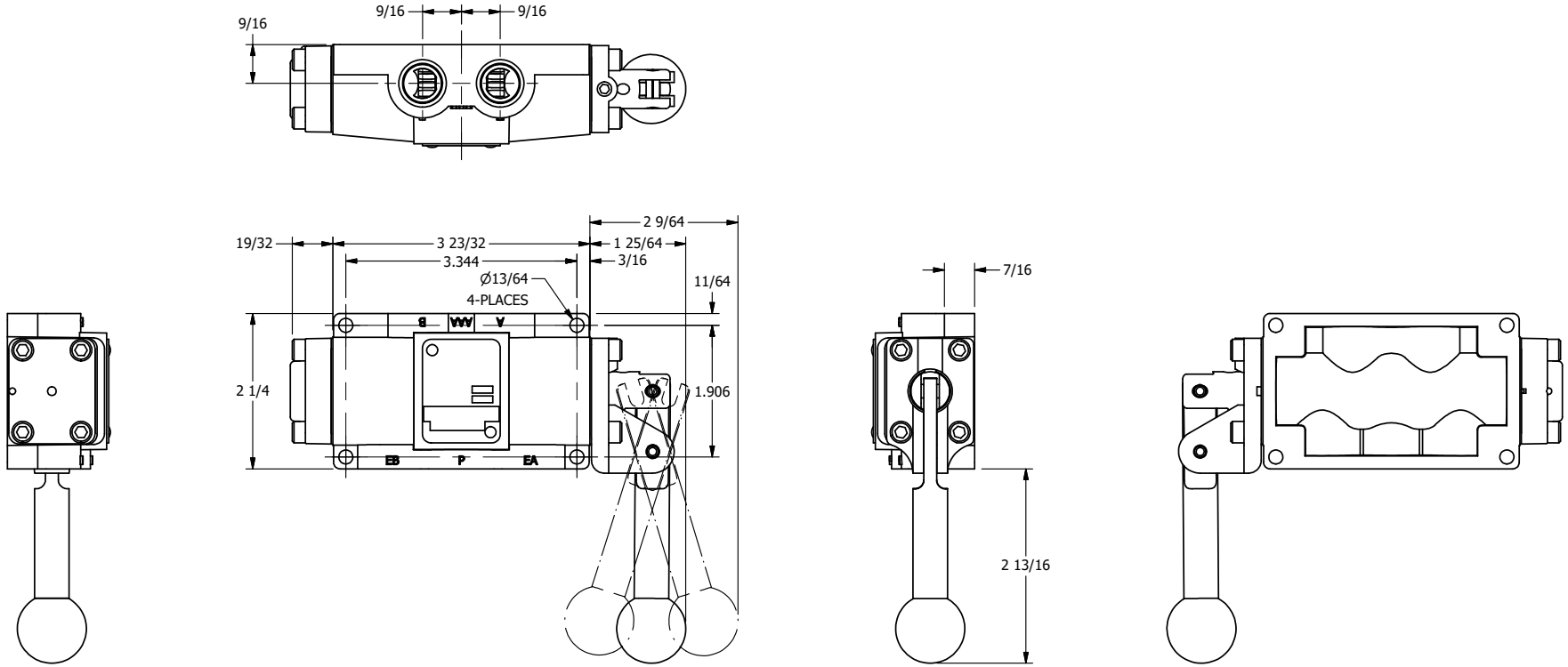

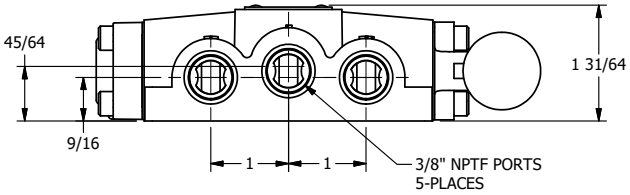

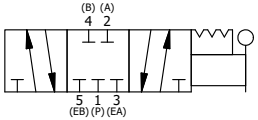

AAA PRODUCTS INTERNATIONAL
7114 Harry Hines Blvd
Dallas, TX 75235

TITLE: 3/8" SIDE PORT, LEVER, 3 POS, DETENT, CLSD CTR SPL, SS, RED KNOB, 270D LVR

DRAWING NO.: DIM_HD3JRTSS

THE INFORMATION CONTAINED WITHIN THIS DOCUMENT IS PROPRIETARY TO AAA PRODUCTS AND MAY NOT BE DISCLOSED WITHOUT PRIOR WRITTEN CONSENT