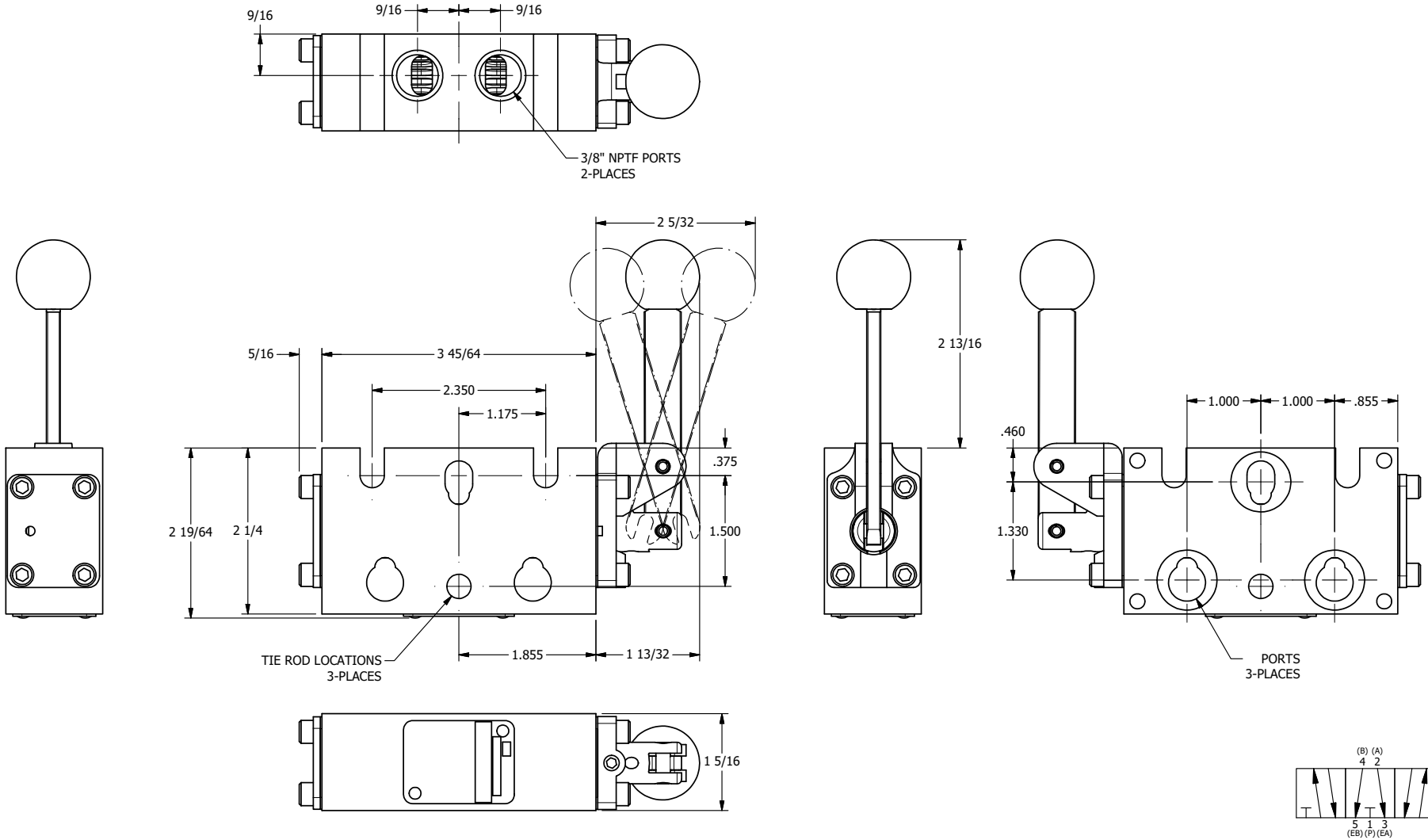

AAA PRODUCTS INTERNATIONAL 7114 Harry Hines Blvd Dallas, TX 75235	TITLE: 3/8" STACK, LEVER, 3 POS, DETENT, FLOAT CTR SPL, SS, RED KNOB, 180D LVR	DRAWING NO.: DIM_BHD3GJT

THE INFORMATION CONTAINED WITHIN THIS DOCUMENT IS PROPRIETARY TO AAA PRODUCTS AND MAY NOT BE DISCLOSED WITHOUT PRIOR WRITTEN CONSENT