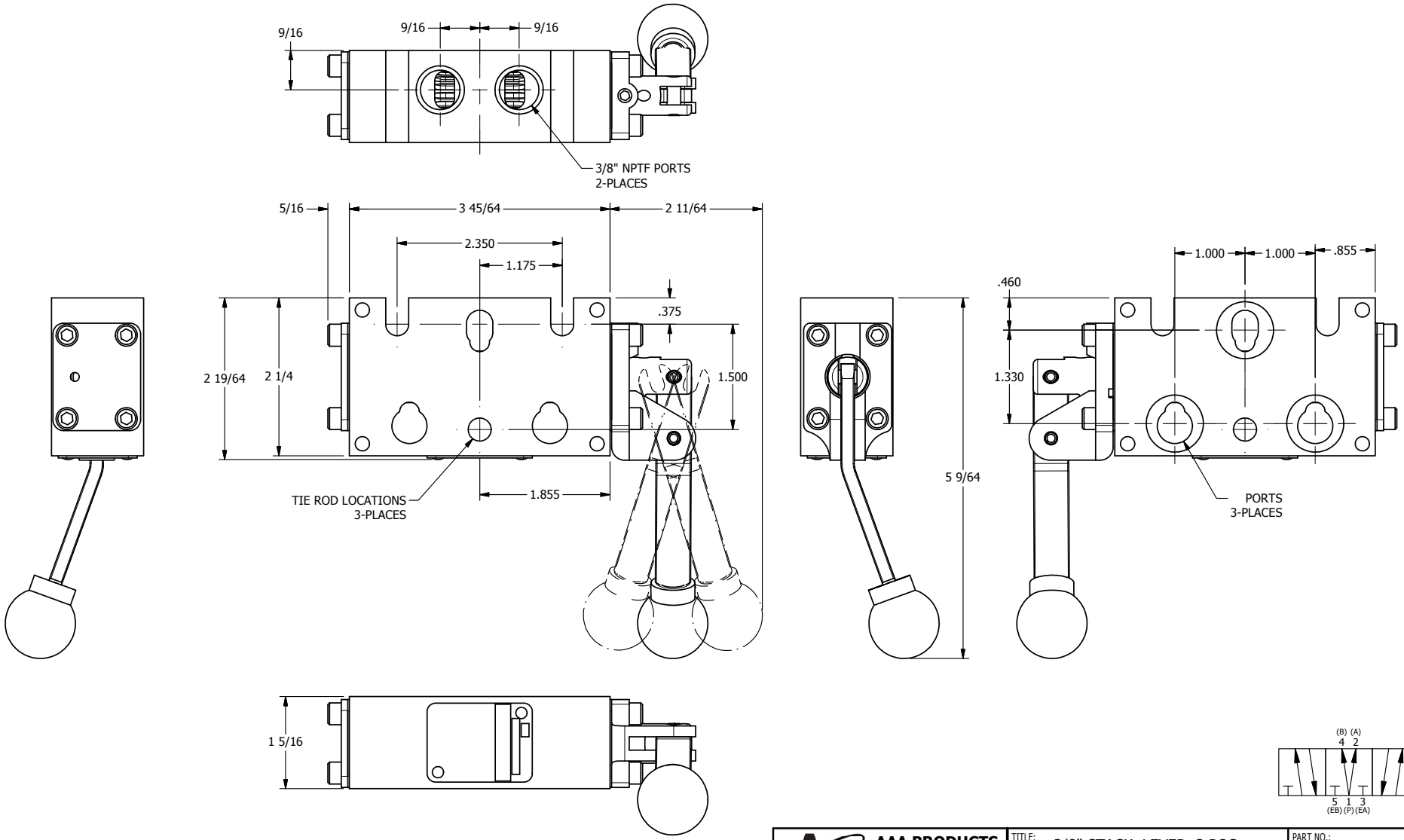

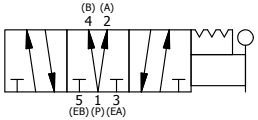

AAA PRODUCTS INTERNATIONAL
7114 Harry Hines Blvd
Dallas, TX 75235

TITLE: 3/8" STACK, LEVER, 3 POS, DETENT, LEVER SHFT, REGEN CTR SPL, BENT LEVER LEFT

PART NO.: DIM_BHD3DBL

THE INFORMATION CONTAINED WITHIN THIS DOCUMENT IS PROPRIETARY TO AAA PRODUCTS AND MAY NOT BE DISCLOSED WITHOUT PRIOR WRITTEN CONSENT