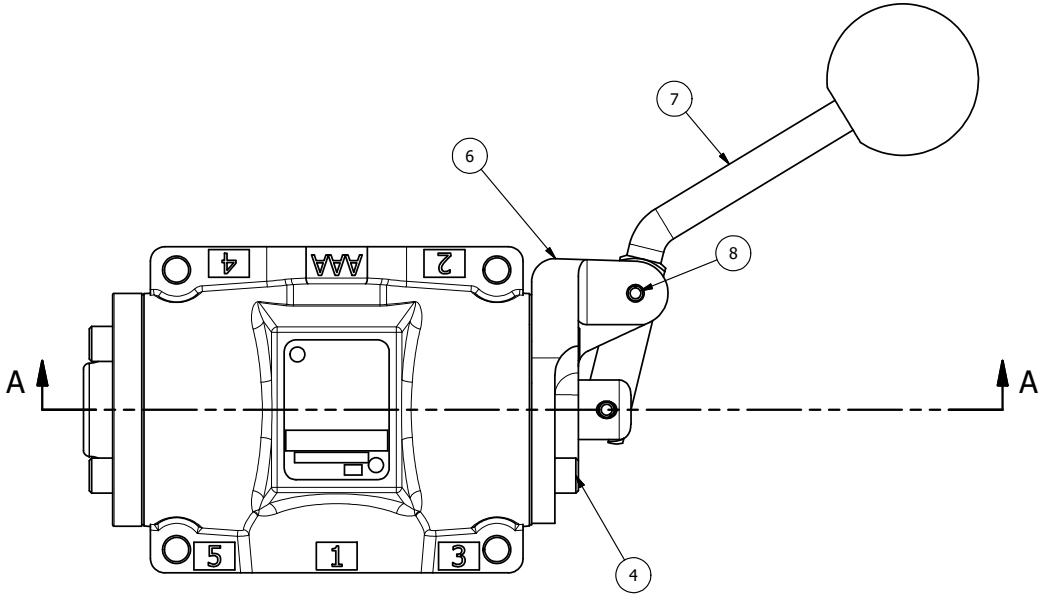

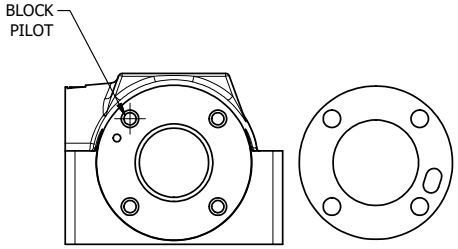

POSITION GASKET ON END OF VALVE SO
GASKET COVERES PILOT HOLE
BOTH SIDES (SIDE 'A' SHOWN)

NOTES:
1) ALWAYS GIVE VALVE MODEL AND PART NUMBER WHEN ORDERING PARTS.

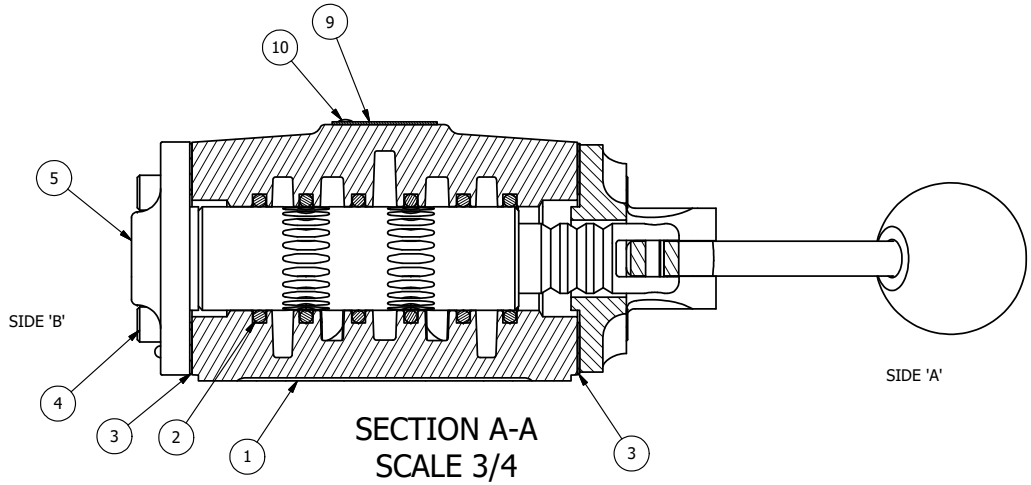

SECTION A-A
SCALE 3/4

FLG	QTY	PART NO	DESCRIPTION
10	2	V-212	SCREW, #2 X 3/16 DRIVE, TYPE U, OVAL HEAD, STAINLESS STEEL
9	1	AN-114	NAMEPLATE, BLANK, FOR VALVES WITH SPRINGS OR DETENTS
8	1	V-10	PIN, ROLL 3/16 X 7/8, STEEL
7	1	HL4-9C	HAND LEVER ASSEMBLY, CURVED LEVER, 1/2" VALVE
6	1	FE4-1	END CAP - HAND & FOOT, 380 AL, 1/2" VALVE
5	1	AY-HA4	ASSY - RTRN TO POS A, LEVER OR TREADLE, 1/2" VALVES
4	8	V-46	SCREW, 1/4-20 X 3/4, SOCKET HEAD CAP
3	2	ECG48	GASKET - END CAP, 1/2", 3/4" & 1" VALVE
2	6	V-6	O-RING, BUNA-N, 70 DURO, AS-216, (REF 1-1/8 X 1-3/8 X 1/8), 1/2" VALVES, 1" SUBPLATE
1	1	B4-1	BODY, 1/2" SIDE PORT, UPPER PILOTS, ANODIZED

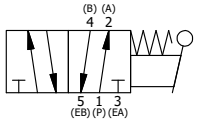

LIMITS ON DIMENSIONS UNLESS OTHERWISE SPECIFIED
2-PL DECIMAL ± .01
3-PL DECIMAL ± .005
FRACTIONAL ± 1/64
ANGULAR ± 1/2'

AAA PRODUCTS INTERNATIONAL
7114 Harry Hines Blvd
Dallas, TX 75235

DRAWN: RMcKenna	DATE: 6/29/2022	CHECKED: KWaite	DATE: 6/29/2022
SCALE: 3/4	SHEET: 1 OF 1	RELEASED: HWomack	DATE: 6/29/2022

TITLE:
1/2" SIDE PORT, LEVER, 2 POS,
RVRS SPR RTRN,
CRVD LVR, 90D LVR

PART NO.: HA4CR

REV.:

THE INFORMATION CONTAINED WITHIN THIS DOCUMENT IS PROPRIETARY TO AAA PRODUCTS AND MAY NOT BE DISCLOSED WITHOUT PRIOR WRITTEN CONSENT

D:\Engineering\Product\Valves\Assembly\Lever\HA\DWG\HA4CR.dwg