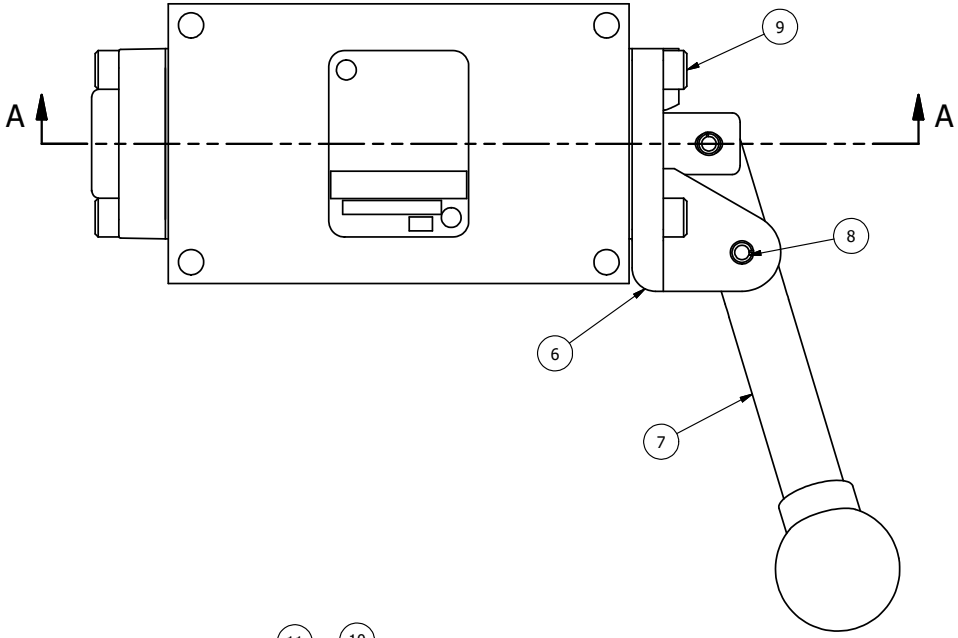

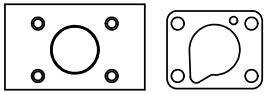

POSITION GASKET ON END OF VALVE SO
MOUNTING HOLES ALIGN
BOTH ENDS (SIDE 'A' SHOWN)

NOTES:
1) ALWAYS GIVE VALVE MODEL, AND PART NUMBER WHEN ORDERING PARTS.

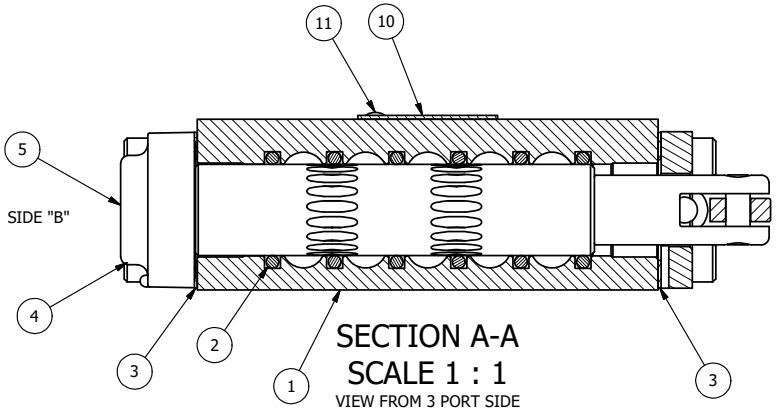

SECTION A-A
SCALE 1 : 1
VIEW FROM 3 PORT SIDE

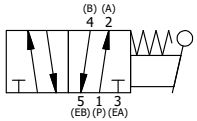

FLG	QTY	PART NO	DESCRIPTION
11	2	V-212	SCREW, #2 X 3/16 DRIVE, TYPE U, OVAL HEAD, STAINLESS STEEL
10	1	AN-114	NAMEPLATE, BLANK, FOR VALVES WITH SPRINGS OR DETENTS
9	4	V-162	SCREW, 10-24 X 5/8, SOCKET HEAD CAP
8	1	V-542	PIN, ROLL 3/16 X 1/2 ZINC PLATED STEEL FOR HE3-4 END CAP
7	1	HL3-24B20	HAND LEVER WITH KNOB, BENT 20 DEG SIDEWAYS, 1/4" & 3/8" VALVES
6	1	HE3-4	ENDCAP - HAND OPERATOR, 303 STAINLESS, 1/4" & 3/8" STACK VALVE
5	1	AY-HA3	ASSY - NO DETENT, RTRN TO POS A, LEVER OR TREADLE, 1/4 & 3/8 VALVES
4	4	V-38	SCREW, 10-24 X 3/4, SOCKET HEAD CAP
3	2	ECG3	GASKET - END CAP, 1/4" & 3/8" VALVE
2	6	V-39	O-RING, VITON, STD BODY, 1/4" & 3/8" VALVES
1	1	B2-2E	BODY - SOLID, PLAIN, NO PILOTS, ANODIZED, 1/4" SIDE PORT VALVE

LIMITS ON DIMENSIONS UNLESS OTHERWISE SPECIFIED
2-PL DECIMAL ± .01
3-PL DECIMAL ± .005
FRACTIONAL ± 1/64
ANGULAR ± 1/2'

AAA PRODUCTS INTERNATIONAL
7114 Harry Hines Blvd
Dallas, TX 75235

DRAWN: RMcKenna	DATE: 6/29/2022	CHECKED: KWaite	DATE: 6/29/2022
SCALE: 1 : 1	SHEET: 1 OF 1	RELEASED: HWomack	DATE: 6/29/2022

TITLE:
1/4" SIDE PORT, LEVER, 2 POS,
RVRS SPR RTRN,
BNT LVR RGHT, 270D LVR

PART NO.: HA2BRRT

REV.:

THE INFORMATION CONTAINED WITHIN THIS DOCUMENT IS PROPRIETARY TO AAA PRODUCTS AND MAY NOT BE DISCLOSED WITHOUT PRIOR WRITTEN CONSENT

D:\Engineering\Product\Valves\Assembly\Lever\HA2\DWG\HA2BRRT.dw