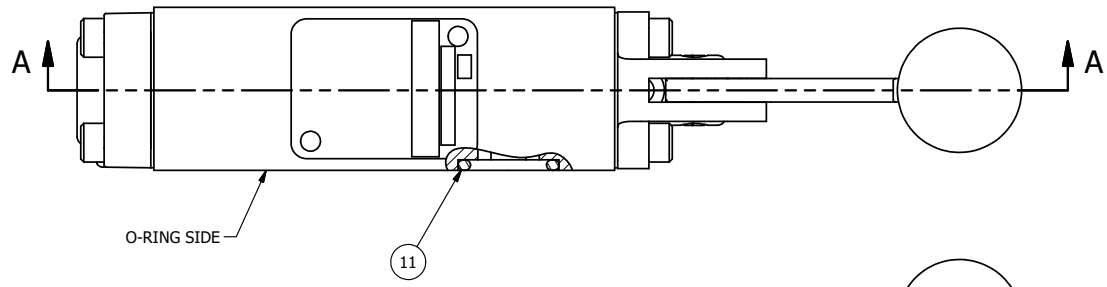

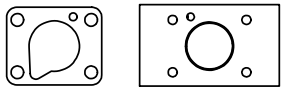

POSITION GASKET ON END OF VALVE
TO SEAL PILOT HOLE IF PRESENT,
BOTH SIDES (SIDE 'B' SHOWN)

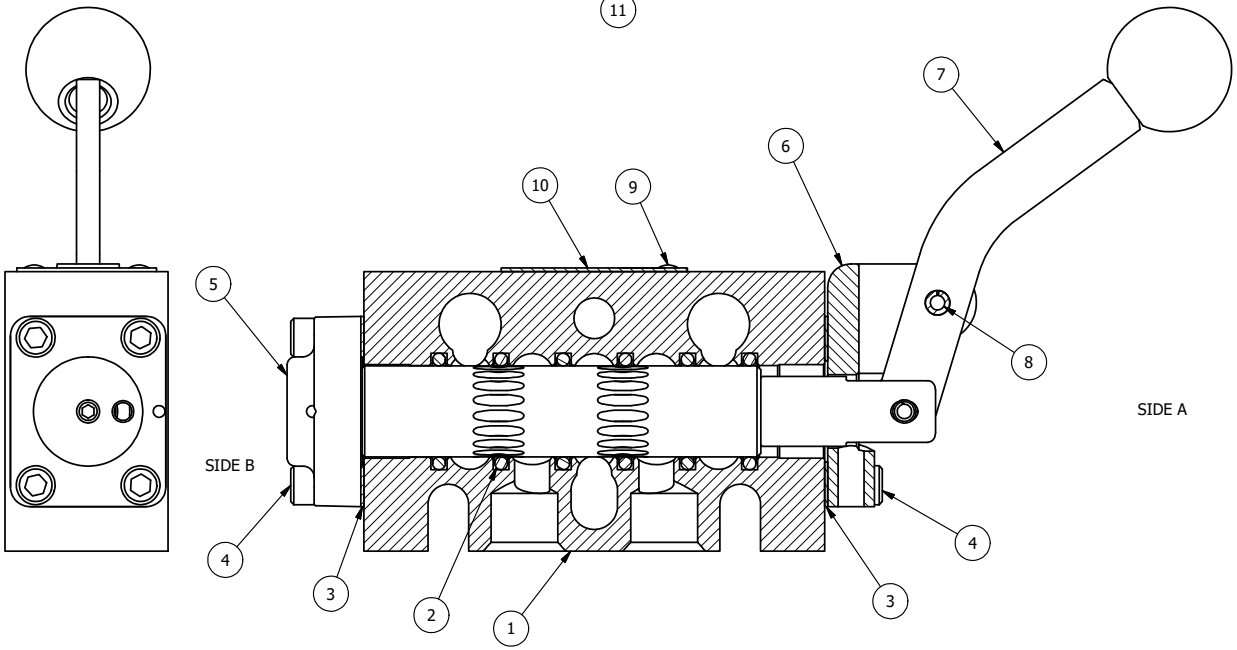

NOTES:
1) ALWAYS GIVE VALVE MODEL AND PART NUMBER WHEN ORDERING PARTS.

FLG	QTY	PART NO	DESCRIPTION
11	3	V-110	O-RING, BUNA-N, 70 DURO, AS-114, (REF 5/8 X 13/16 X 3/32), 1/4" SLEEVE, 1/2" SUB, STACK
10	1	AN-114	NAMEPLATE, BLANK, FOR VALVES WITH SPRINGS OR DETENTS
9	2	V-212	SCREW, #2 X 3/16 DRIVE, TYPE U, OVAL HEAD, STAINLESS STEEL
8	1	V-542	PIN, ROLL 3/16 X 1/2 ZINC PLATED STEEL FOR HE3-4 END CAP
7	1	HL3-521C	CURVED HAND LEVER WITH RED KNOB, 1/4" & 3/8" VALVE
6	1	HE3-4	ENDCAP - HAND OPERATOR, 303 STAINLESS, 1/4" & 3/8" STACK VALVE
5	1	AY-HA3	ASSY - NO DETENT, RTRN TO POS A, LEVER OR TREADLE, 1/4 & 3/8 VALVES
4	8	V-38	SCREW, 10-24 X 3/4, SOCKET HEAD CAP
3	2	ECG3	GASKET - END CAP, 1/4" & 3/8" VALVE
2	6	V-39	O-RING, VITON, STD BODY, 1/4" & 3/8" VALVES
1	1	B3-10E	FINISHED - SOLID BODY, UPPER PILOTS, 3/8" STACKING VALVE

SECTION A-A
SCALE 1 : 1

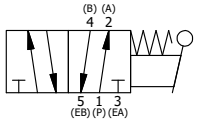

LIMITS ON DIMENSIONS UNLESS OTHERWISE SPECIFIED	2-PL DECIMAL ± .01 3-PL DECIMAL ± .005 FRACTIONAL ± 1/64 ANGULAR ± 1/2'	AAA PRODUCTS INTERNATIONAL 7114 Harry Hines Blvd Dallas, TX 75235
DRAWN: RMcKenna	DATE: 6/29/2022	CHECKED: KWaite DATE: 6/29/2022
SCALE: 1 : 1	SHEET: 1 OF 1	RELEASED: HWomack DATE: 6/29/2022
TITLE: 3/8" STACK, LEVER, 2 POS, RVRS SPR RTRN, CRVD LVR, RED KNOB	PART NO.: BHA3CJ	REV.:

THE INFORMATION CONTAINED WITHIN THIS DOCUMENT IS PROPRIETARY TO AAA PRODUCTS AND MAY NOT BE DISCLOSED WITHOUT PRIOR WRITTEN CONSENT

D:\Engineering\Product\Valves\Assembly\Lever\HA3\DWG\BHA3CJ.idw