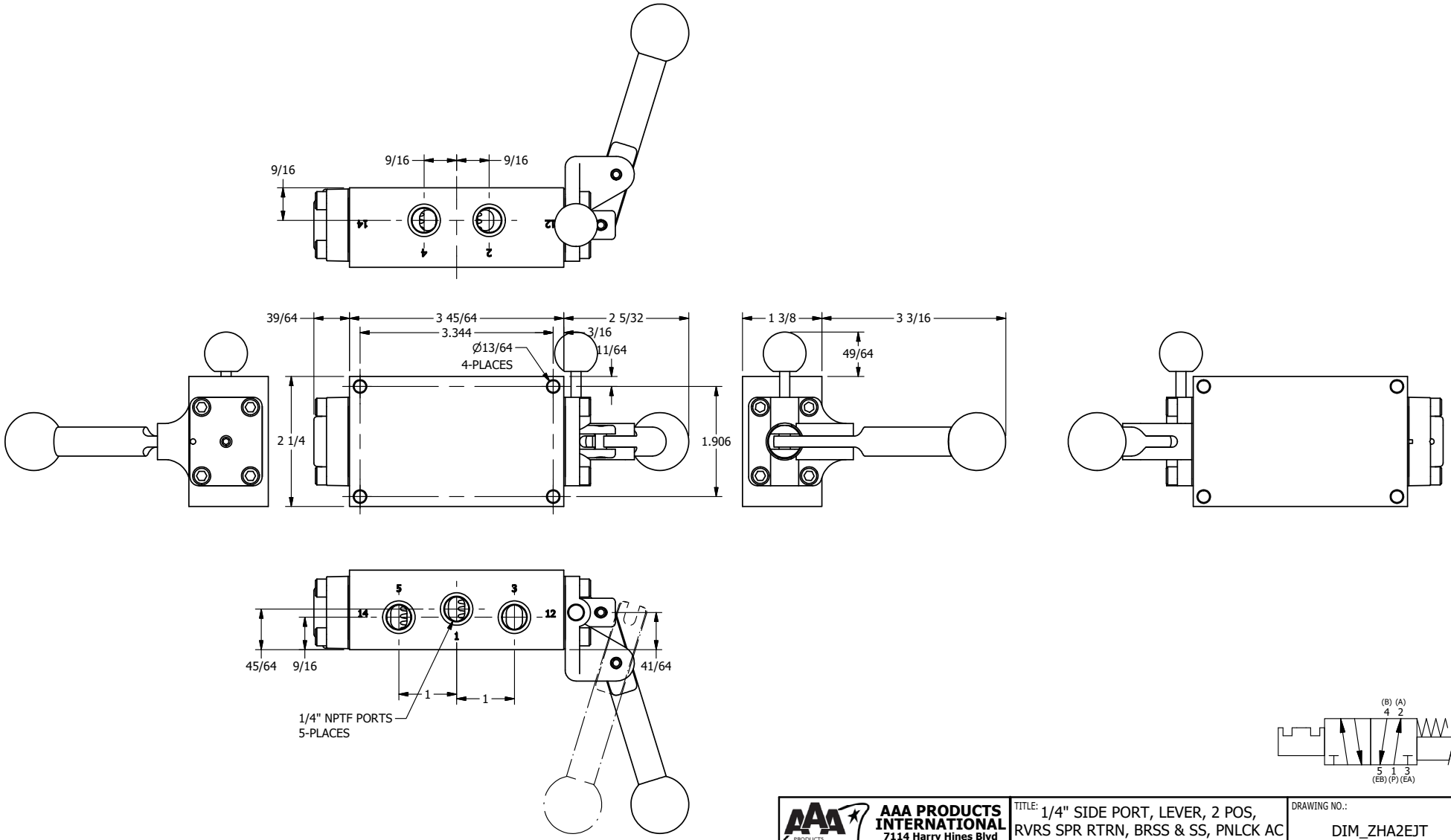

AAA PRODUCTS INTERNATIONAL 7114 Harry Hines Blvd Dallas, TX 75235	TITLE: 1/4" SIDE PORT, LEVER, 2 POS, RVRS SPR RTRN, BRSS & SS, PNLCK AC RED KNOB, 180D LVR	DRAWING NO.: DIM_ZHA2EJT

THE INFORMATION CONTAINED WITHIN THIS DOCUMENT IS PROPRIETARY TO AAA PRODUCTS AND MAY NOT BE DISCLOSED WITHOUT PRIOR WRITTEN CONSENT