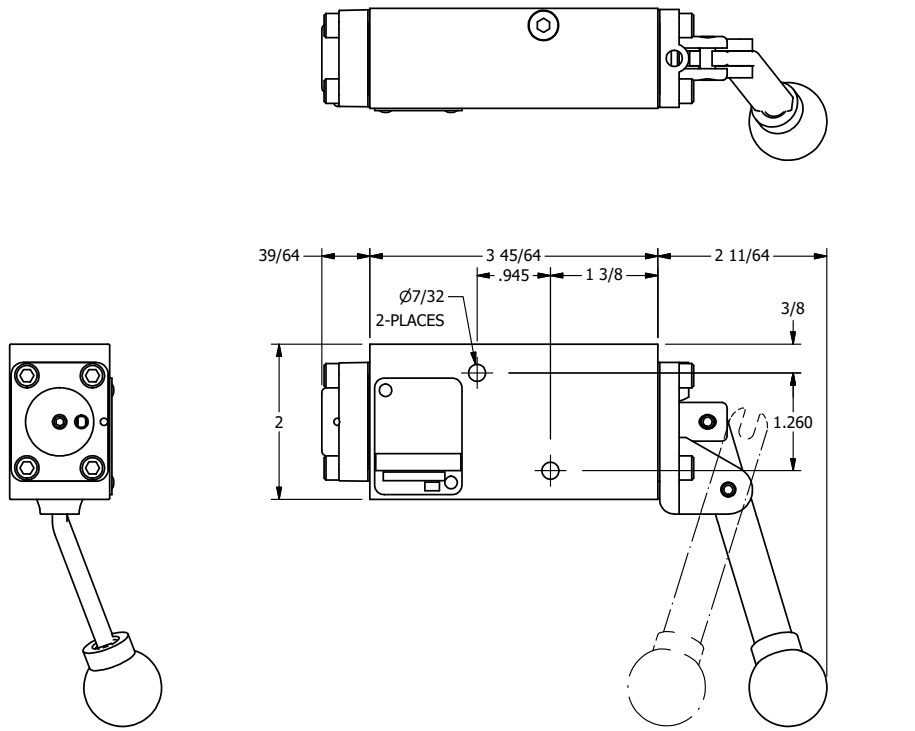

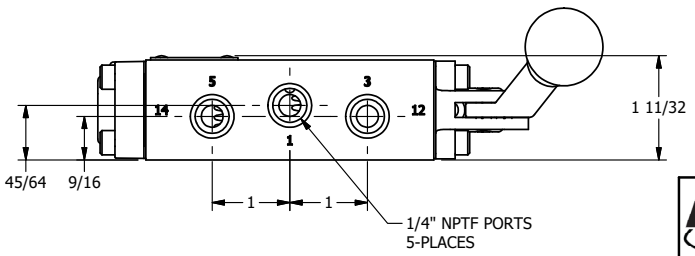

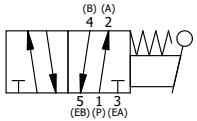

AAA PRODUCTS INTERNATIONAL
7114 Harry Hines Blvd
Dallas, TX 75235

TITLE: 1/4" NAMUR, LEVER, 2 POS, RVRS SPR RTRN, BNT LVR RGHT, 270D LVR

DRAWING NO.: DIM_NHA2BRRT

THE INFORMATION CONTAINED WITHIN THIS DOCUMENT IS PROPRIETARY TO AAA PRODUCTS AND MAY NOT BE DISCLOSED WITHOUT PRIOR WRITTEN CONSENT