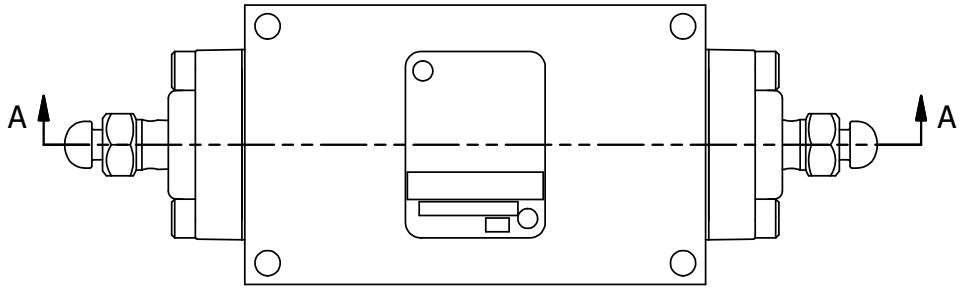

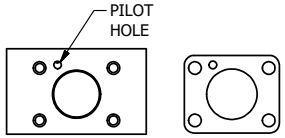

ALIGN PILOT HOLE AND GASKET HOLE
BOTH SIDES (SIDE 'A' SHOWN)

NOTES:
1) ALWAYS GIVE VALVE MODEL AND PART NUMBER WHEN ORDERING PARTS.

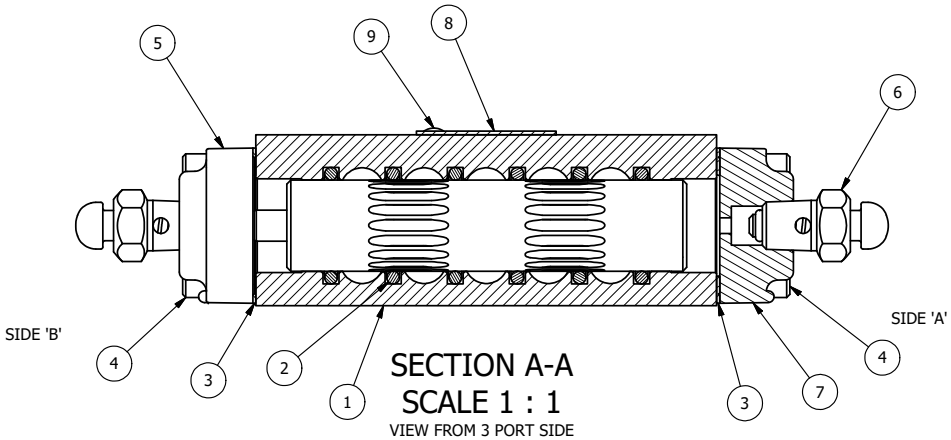

SECTION A-A
SCALE 1 : 1
VIEW FROM 3 PORT SIDE

FLG	QTY	PART NO	DESCRIPTION
9	2	V-212	SCREW, #2 X 3/16 DRIVE, TYPE U, OVAL HEAD, STAINLESS STEEL
8	1	AN-114	NAME PLATE, BLANK, FOR VALVES WITH SPRINGS OR DETENTS.
7	1	DP3	ENDCAP - DP3, 380 AL, 1/4" & 3/8" VALVE
6	2	BB-1S	COMPLETE BUTTON BLEEDER ASSY W/STEEL PLUNGER
5	1	AY-DY3G	ASSY - SPR CTR, FLOAT CTR SPL, DIFF PILOT, 1/4 & 3/8 VALVES
4	8	V-38	SCREW, 10-24 X 3/4, SOCKET HEAD CAP
3	2	BG3	GASKET - END CAP, 1/4" & 3/8" VALVE
2	6	V-39	O-RING, VITON, STD BODY, 1/4" & 3/8" VALVES
1	1	B2-1E	BODY - SOLID, BUTTON BLEEDER, ANODIZED, 1/4" SIDE PORT VALVE

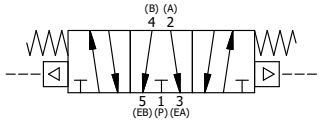

LIMITS ON DIMENSIONS UNLESS OTHERWISE SPECIFIED
2-PL DECIMAL ± .01
3-PL DECIMAL ± .005
FRACTIONAL ± 1/64
ANGULAR ± 1/2'

AAA PRODUCTS INTERNATIONAL
7114 Harry Hines Blvd
Dallas, TX 75235

DRAWN: RMcKenna	DATE: 10/18/2014	CHECKED: KWaite	DATE: 3/27/2015
SCALE: 1 : 1	SHEET: 1 OF 1	RELEASED: HWomack	DATE: 3/27/2015

TITLE:
1/4" SIDE PORT, DIFF PILOT, 3 POS, SPR CTR, DIFF PLT SHFT, FLOAT CTR SPL

PART NO.: DY2G

REV.:

THE INFORMATION CONTAINED WITHIN THIS DOCUMENT IS PROPRIETARY TO AAA PRODUCTS AND MAY NOT BE DISCLOSED WITHOUT PRIOR WRITTEN CONSENT

D:\Engineering\Product\Valve\Assembly\Differential\DY\DWG\DY2G.dw