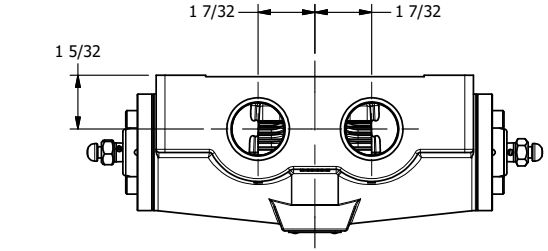

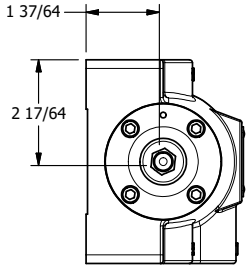

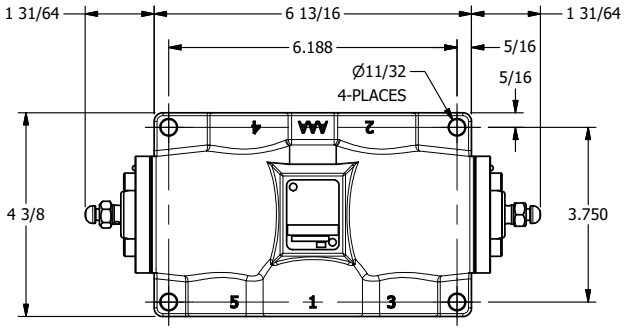

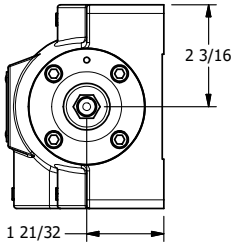

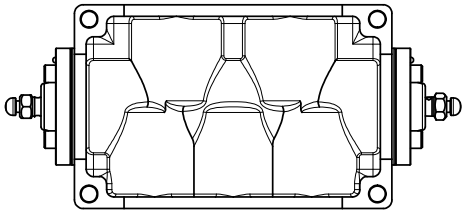

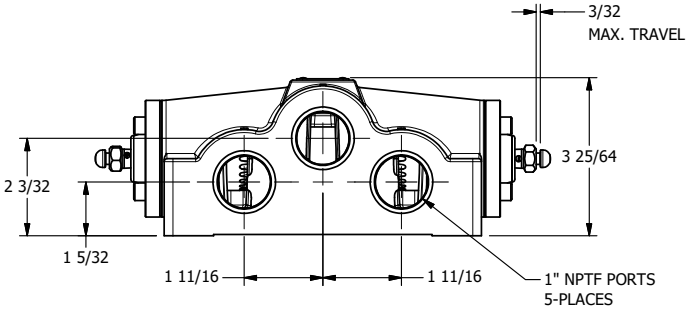

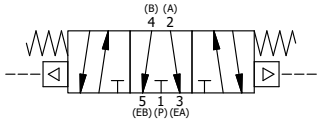

AAA PRODUCTS INTERNATIONAL
7114 Harry Hines Blvd
Dallas, TX 75235

TITLE: 1" SIDE PORT, DIFF PILOT, 3 POS, SPR CTR, FLOAT CTR SPL, DIFF PILOT RTRN

DRAWING NO.: DIM_DY8G

THE INFORMATION CONTAINED WITHIN THIS DOCUMENT IS PROPRIETARY TO AAA PRODUCTS AND MAY NOT BE DISCLOSED WITHOUT PRIOR WRITTEN CONSENT