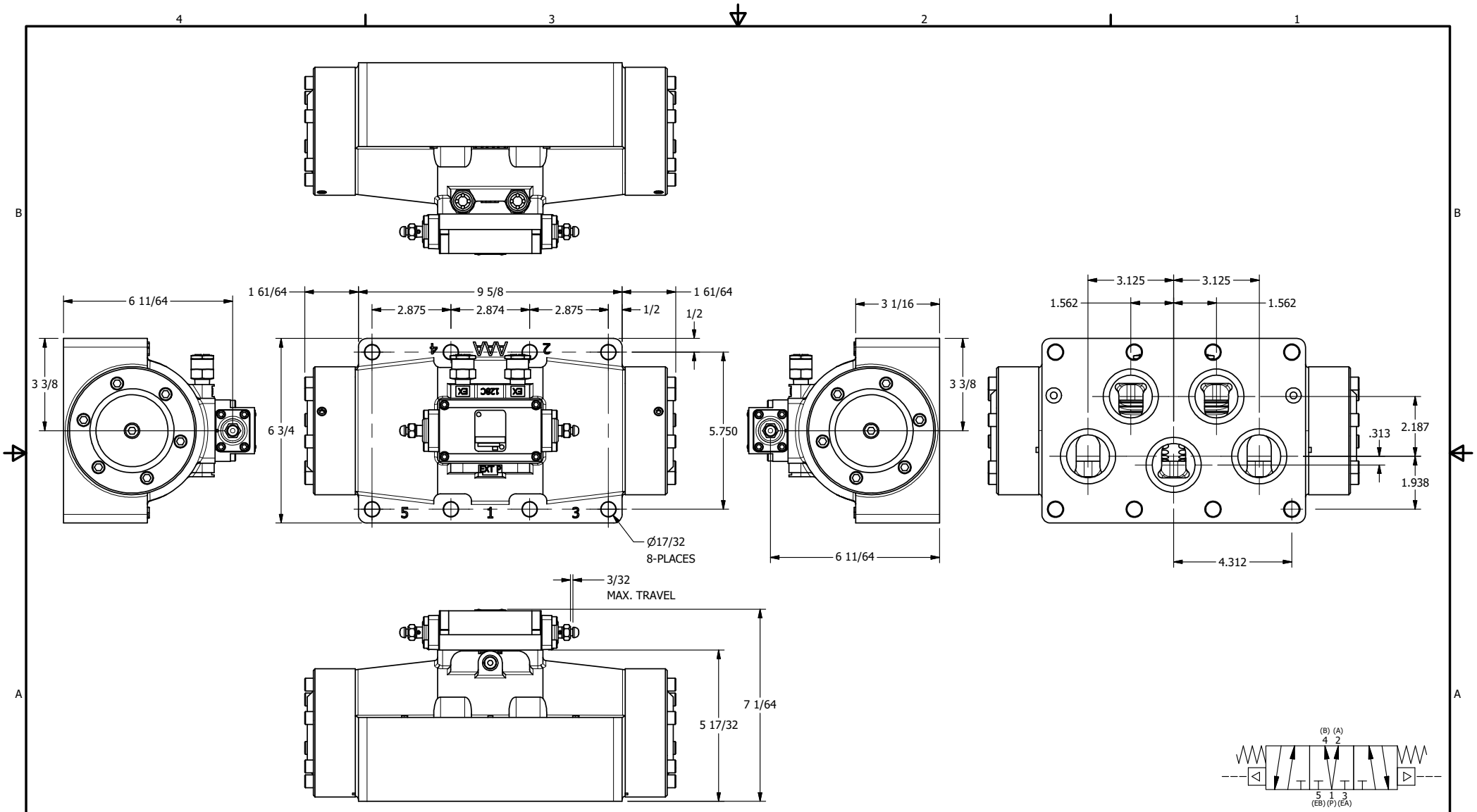

AAA PRODUCTS INTERNATIONAL
7114 Harry Hines Blvd
Dallas, TX 75235

TITLE: 2" SUBPLATE, DIFF PILOT, 3 POS, SPR CTR, REGEN CTR SPL, DIFF PILOT SHFT, EXTERNAL PILOT

DRAWING NO.: DIM_DY16PDZ

THE INFORMATION CONTAINED WITHIN THIS DOCUMENT IS PROPRIETARY TO AAA PRODUCTS AND MAY NOT BE DISCLOSED WITHOUT PRIOR WRITTEN CONSENT