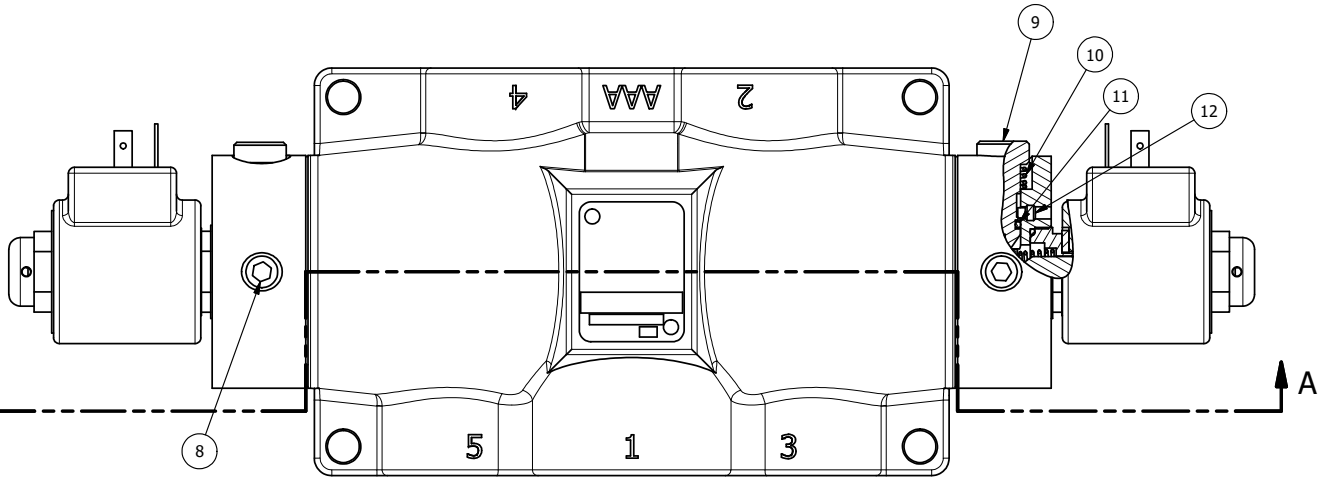

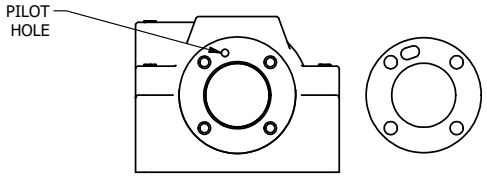

ALIGN PILOT AND HOLE IN GASKET, BOTH SIDES.
FOR EXTERNAL PILOT OPERATION - ROTATE THE ROUND ALUMINUM ADAPTOR 90 OR 180 DEGREES.
REMOVE 1/8" NPTF PLUG AND SUPPLY 50-160 PSI TO 1/8" NPTF PILOT PORT IN ADAPTOR.

NOTES:
1) ALWAYS GIVE VALVE MODEL AND PART NUMBER WHEN ORDERING PARTS.
2) FOR DIFFERENT VOLTAGES OTHER THAN 120/60, REPLACE SOLENOID OPERATOR WITH OPERATOR LISTED IN TABLE BELOW. REFERENCE AY-38EDL DRAWING FOR REPLACEMENT COILS.

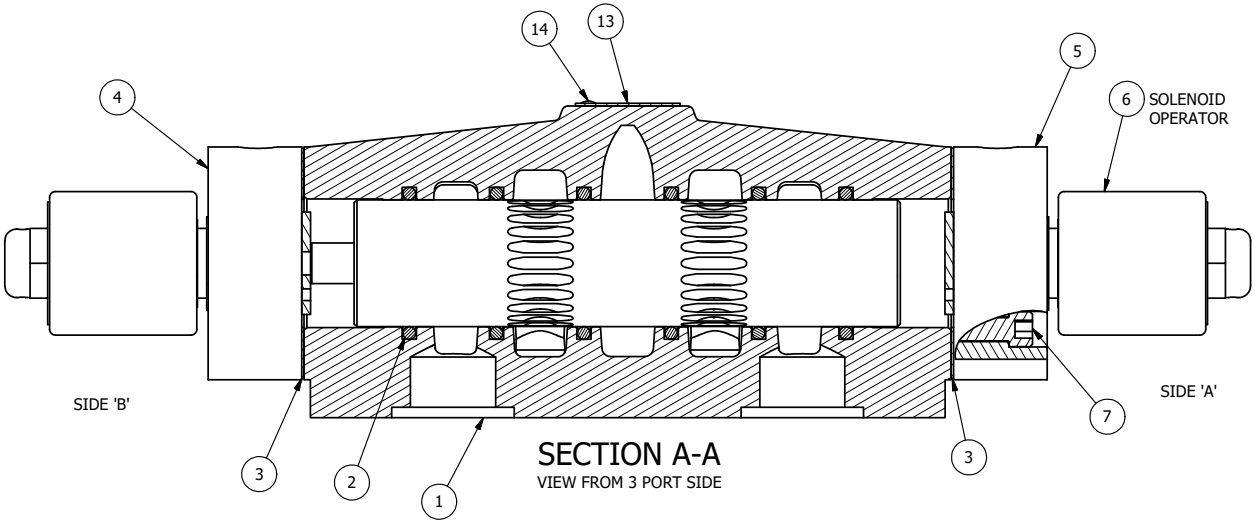

SECTION A-A
VIEW FROM 3 PORT SIDE

FLG	QTY	PART NO	DESCRIPTION
15	1	SPK-8	KIT - SUBPLATE MOUNT, 1" SUBPLATE VALVES
14	2	V-212	SCREW, #2 X 3/16 DRIVE, TYPE U, OVAL HEAD, STAINLESS STEEL
13	1	AN-114	NAMEPLATE, BLANK, FOR VALVES WITH SPRINGS OR DETENTS
12	2	V-81	SCREW, 8-32 X 5/16, SOCKET SET, FULL DOG POINT
11	2	V-85	O-RING, BUNA-N, 70 DURO, AS-010, (REF 1/4 X 3/8 X 1/16), CLASSIC OVRD
10	2	OS3	SPRING - MANUAL OVERRIDE, "CLASSIC" SOLENOID
9	2	POP-3	OVERRIDE, PUSH PIN, 303 STAINLESS, 1/4" & 3/8" VALVE
8	2	V-19	PLUG, 1/8-27 NPT, 7/8 TAPER, FLUSH SEAL, SOCKET PIPE PLUG W/LOCTITE RED VIBRA-SEAL
7	8	V-47	SCREW, 1/4-20 X 1, SOCKET HEAD CAP
6	2	AY-38EDL-11	CLASSIC SOLENOID - ISO 4400 DIN, DUST EXCLUDER NUT, 120/60
5	1	SSA48-OP	ADAPTOR, 'A' SIDE, CLASSIC SOL., POP PIN OVERRIDE, 1/2", 3/4" & 1" VALVE
4	1	AY-SY8OP-LSO	ASSY - SPR CTR, CLSD CTR SPL, CLSC SOL, LESS OPER, PUSH OVRD, 3/4" & 1" VALVE
3	2	ECG48	GASKET - END CAP, 1/2", 3/4" & 1" VALVE
2	6	V-30	O-RING, BUNA-N, 70 DURO, AS-220, (REF 1-3/8 X 1-5/8 X 1/8), 3/4" & 1" VALVES
1	1	BP8-1	BODY, 1" SUBPLATE, UPPER PILOTS, ANODIZED

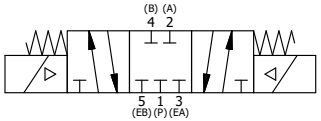

OPERATOR VOLTAGES	
PART NO	REPLACE OPERATOR
SY8PEDOPL 12VDC	AY-38EDL-5
SY8PEDOPL 24VDC	AY-38EDL-8
SY8PEDOPL 240/60	AY-38EDL-17

LIMITS ON DIMENSIONS UNLESS OTHERWISE SPECIFIED
2-PL DECIMAL ± .01
3-PL DECIMAL ± .005
FRACTIONAL ± 1/64
ANGULAR ± 1/2'

AAA PRODUCTS INTERNATIONAL
7114 Harry Hines Blvd
Dallas, TX 75235

DRAWN: RMcKenna DATE: 3/28/2025
CHECKED: KWaite DATE: 3/28/2025
SCALE: 1 : 1 SHEET: 1 OF 1
RELEASED: HWomack DATE: 3/28/2025

TITLE: 1" SUBPLATE, DBL SOL, 3 POS, SPR CLSD CTR, ISO 4400, 120/60, PUSH OVRD, DUST EXCLDR

PART NO.: SY8PEDOPL

REV.:

THE INFORMATION CONTAINED WITHIN THIS DOCUMENT IS PROPRIETARY TO AAA PRODUCTS AND MAY NOT BE DISCLOSED WITHOUT PRIOR WRITTEN CONSENT

D:\Engineering\Product\Valves\Assembly\classic\SY8\WG\SY8PEDOPL.dw