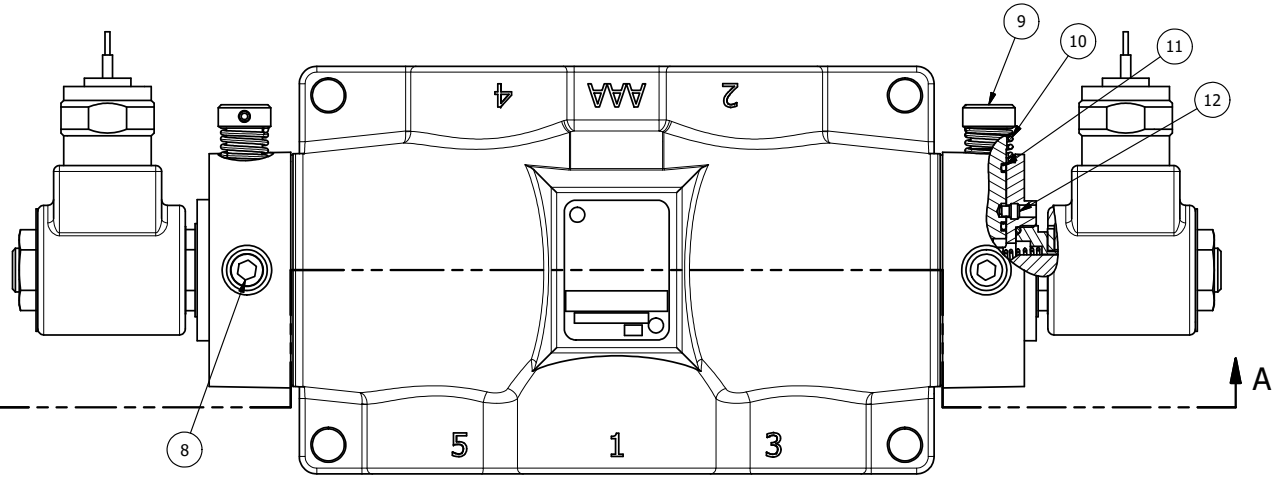

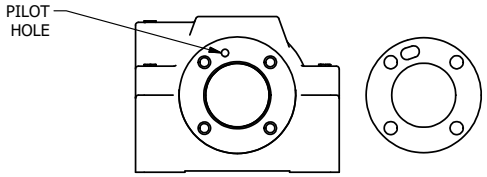

ALIGN PILOT AND HOLE IN GASKET, BOTH SIDES.
FOR EXTERNAL PILOT OPERATION - ROTATE THE
ROUND ALUMINUM ADAPTOR 90 OR 180 DEGREES.
REMOVE 1/8" NPTF PLUG AND SUPPLY 50-160 PSI TO
1/8" NPTF PILOT PORT IN ADAPTOR.

NOTES:
1) ALWAYS GIVE VALVE MODEL AND PART NUMBER WHEN ORDERING PARTS.
2) FOR DIFFERENT VOLTAGES OTHER THAN 120/60, REPLACE SOLENOID OPERATOR WITH OPERATOR LISTED IN TABLE BELOW. REFERENCE AY-38M DRAWING FOR REPLACEMENT COILS.

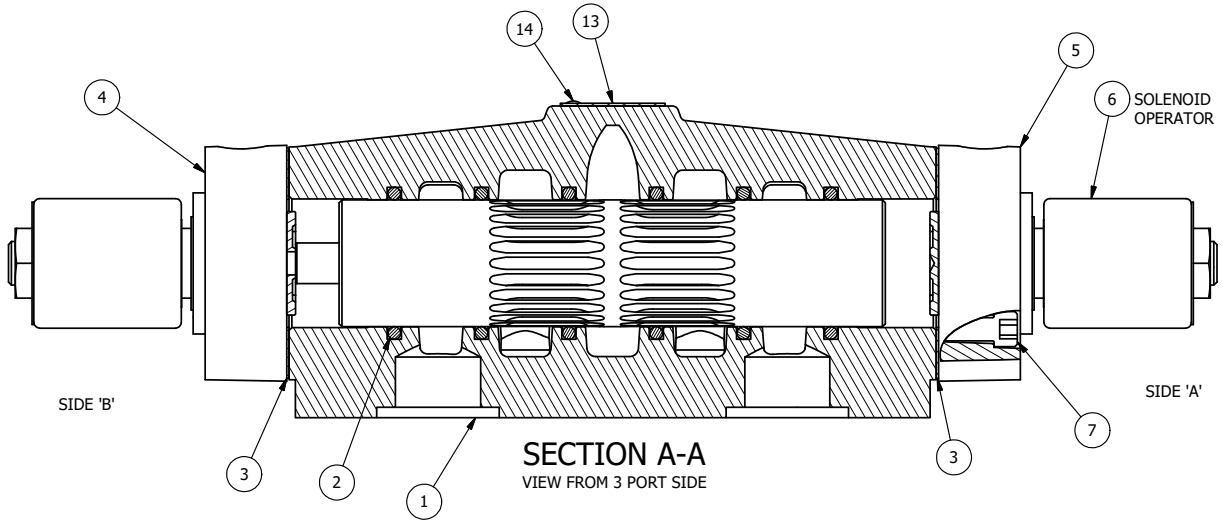

SECTION A-A
VIEW FROM 3 PORT SIDE

FLG	QTY	PART NO	DESCRIPTION
15	1	SPK-8	KIT - SUBPLATE MOUNT, 1" SUBPLATE VALVES
14	2	V-212	SCREW, #2 X 3/16 DRIVE, TYPE U, OVAL HEAD, STAINLESS STEEL
13	1	AN-114	NAMEPLATE, BLANK, FOR VALVES WITH SPRINGS OR DETENTS
12	2	V-81	SCREW, 8-32 X 5/16, SOCKET SET, FULL DOG POINT
11	4	V-85	O-RING, BUNA-N, 70 DURO, AS-010, (REF 1/4 X 3/8 X 1/16), CLASSIC OVRD
10	2	OS3W	SPRING - OVERRIDE RETURN, "CLASSIC" SOLENOID
9	2	OP4-W	OVERRIDE PIN, SPRING RETURN, 1/2", 3/4" & 1" VALVE
8	2	V-19	PLUG, SOCKET PIPE 1/8" NPT (#601-3 PITTSBURG PLUG PART #.)
7	8	V-47	SCREW, 1/4-20 X 1, SOCKET HEAD CAP
6	2	AY-38M-11	CLASSIC SOLENOID - 1/2" NPT CONDUIT, 120/60
5	1	SSA48-OW	ADAPTOR, 'A' SIDE, CLASSIC SOL., NON-LOCKING OVERRIDE, 1/2", 3/4" & 1" VALVE
4	1	AY-SY8DON-LSO	ASSY - SPR CTR, REGEN CTR SPL, CLSC SOL, LESS OPER, NON-LCKG OVRD, 3/4" & 1" VALVE
3	2	ECG48	GASKET - END CAP, 1/2", 3/4" & 1" VALVE
2	6	V-30	O-RING, BUNA-N, 70 DURO, AS-220, (REF 1-3/8 X 1-5/8 X 1/8), 3/4" & 1" VALVES
1	1	BP8-1	BODY, 1" SUBPLATE, UPPER PILOTS, ANODIZED

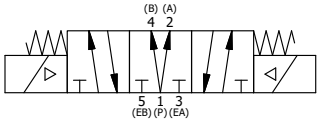

OPERATOR VOLTAGES	
PART NO	REPLACE OPERATOR
SY8PDMON 240/60	AY-38M-17
SY8PDMON 24VDC	AY-38M-8
SY8PDMON 12VDC	AY-38M-5

LIMITS ON DIMENSIONS UNLESS OTHERWISE SPECIFIED
2-PL DECIMAL ± .01
3-PL DECIMAL ± .005
FRACTIONAL ± 1/64
ANGULAR ± 1/2'

AAA PRODUCTS INTERNATIONAL
7114 Harry Hines Blvd
Dallas, TX 75235

DRAWN: RMcKenna DATE: 3/10/2016
CHECKED: KWaite DATE: 3/10/2016
SCALE: 1 : 1 SHEET: 1 OF 1
RELEASED: HWomack DATE: 3/10/2016

TITLE:
1" SUBPLATE, DBL SOL, 3 POS,
SPR CTR, REGEN CTR SPL, MOLD-OVER,
120/60, NON-LCKNG OVRD

PART NO.: SY8PDMON
REV.:

THE INFORMATION CONTAINED WITHIN THIS DOCUMENT IS PROPRIETARY TO AAA PRODUCTS AND MAY NOT BE DISCLOSED WITHOUT PRIOR WRITTEN CONSENT

D:\Engineering\Product\Valve\Assembly\Classic\SY8pd\Grp\SY8PDMON.dw