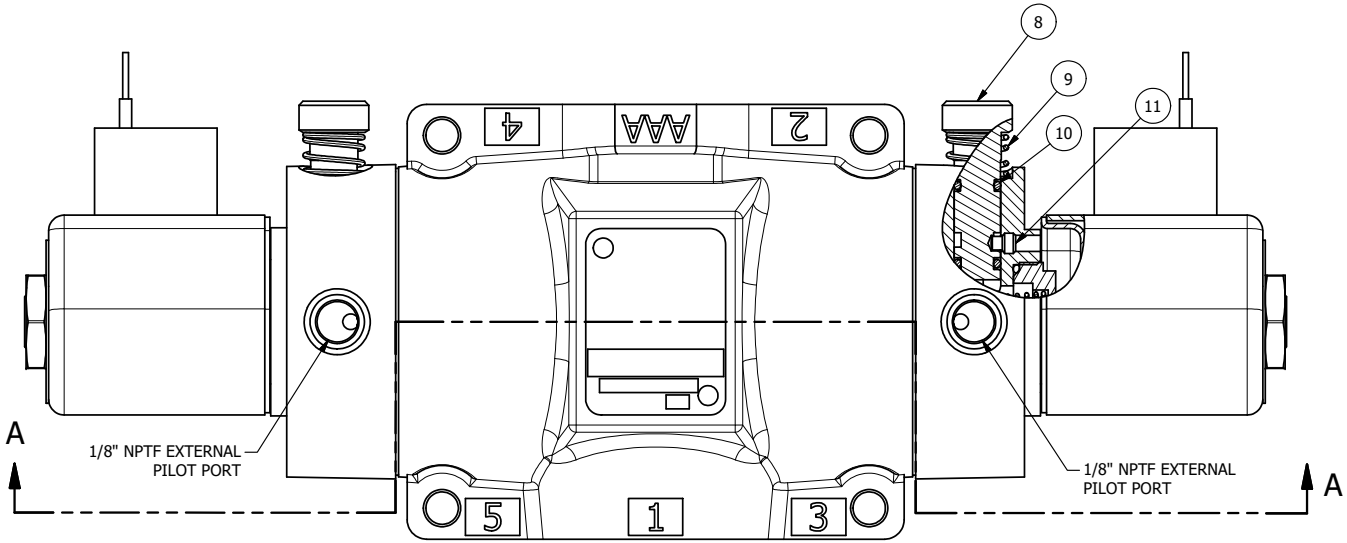


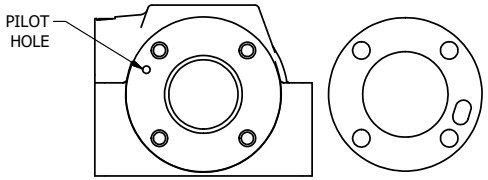


POSITION GASKET TO SEAL PILOT HOLE, BOTH SIDES.
THE ROUND ALUMINUM ADAPTOR IS ROTATED 90 DEGREES.
SUPPLY 50-160 PSI TO 1/8" NPTF PILOT PORT IN ADAPTOR.

NOTES:
1) ALWAYS GIVE VALVE MODEL AND PART NUMBER WHEN ORDERING PARTS.
2) FOR DIFFERENT VOLTAGES OTHER THAN 120/60, REPLACE SOLENOID OPERATOR WITH OPERATOR LISTED IN TABLE BELOW. REFERENCE AY-38 DRAWING FOR REPLACEMENT COILS.

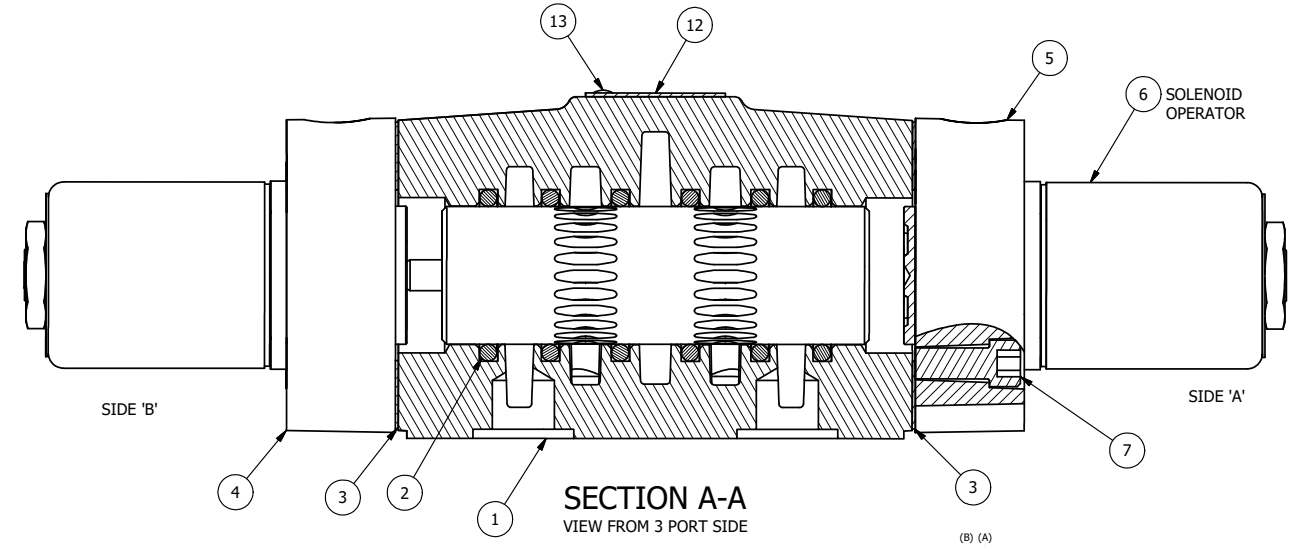


## SECTION A-A
VIEW FROM 3 PORT SIDE

| FLG | QTY | PART NO | DESCRIPTION |
|---|---|---|---|
| 14 | 1 | SPK-4 | KIT - SUBPLATE MOUNT, 1/2" SUBPLATE VALVES |
| 13 | 2 | V-212 | SCREW, #2 X 3/16 DRIVE, TYPE U, OVAL HEAD, STAINLESS STEEL |
| 12 | 1 | AN-114 | NAMEPLATE, BLANK, FOR VALVES WITH SPRINGS OR DETENTS |
| 11 | 2 | V-81 | SCREW, 8-32 X 5/16, SOCKET SET, FULL DOG POINT |
| 10 | 4 | V-85 | O-RING, BUNA-N, 70 DURO, AS-010, (REF 1/4 X 3/8 X 1/16), CLASSIC OVRD |
| 9 | 2 | OS3 | SPRING - MANUAL OVERRIDE, "CLASSIC" SOLENOID |
| 8 | 2 | OP4 | PIN , MANUAL OVERRIDE, 1/2", 3/4" & 1" VALVES |
| 7 | 8 | V-47 | SCREW, 1/4-20 X 1, SOCKET HEAD CAP |
| 6 | 2 | AY-38-11 | CLASSIC SOLENOID - STANDARD, COMPLETE OPERATOR, 120/60 |
| 5 | 1 | SSA48-O | ADAPTOR, 'A' SIDE, CLASSIC SOL., OVERRIDE, 1/2", 3/4" & 1" VALVE |
| 4 | 1 | AY-SY4O-LSO | SPRING CENTER SPOOL ASS'Y, MAN. OVERRIDE, LESS SOL. OPER., 1/2" VALVES |
| 3 | 2 | ECG48 | GASKET - END CAP, 1/2", 3/4" & 1" VALVE |
| 2 | 6 | V-6 | O-RING, BUNA-N, 70 DURO, AS-216, (REF 1-1/8 X 1-3/8 X 1/8), 1/2" VALVES, 1" SUBPLATE |
| 1 | 1 | BP4-1 | BODY, 1/2" SUBPLATE, UPPER PILOTS, ANODIZED |

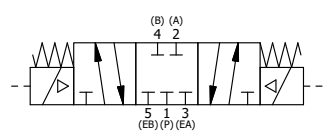


| OPERATOR VOLTAGES | |
|---|---|
| PART NO | REPLACE OPERATOR |
| SY4POZ 240/60 | AY-38-17 |
| SY4POZ 24VDC | AY-38-8 |
| SY4POZ 12VDC | AY-38-5 |

LIMITS ON DIMENSIONS UNLESS OTHERWISE SPECIFIED
2-PL DECIMAL ± .01
3-PL DECIMAL ± .005
FRACTIONAL ± 1/64
ANGULAR ± 1/2°

**AAA PRODUCTS INTERNATIONAL**
7114 Harry Hines Blvd
Dallas, TX 75235

DRAWN: RMcKenna DATE: 11/2/2015
CHECKED: KWaite DATE: 11/2/2015
SCALE: 1 : 1 SHEET: 1 OF 1
RELEASED: HWomack DATE: 11/2/2015

TITLE: 1/2" SUBPLATE, DBL SOL, 3 POS., SPR CTR, CLSD CTR SPL, CLASSIC SOL, 120/60, LCKNG OVRD, EXT PILOT

PART NO.: SY4POZ

REV.:

THE INFORMATION CONTAINED WITHIN THIS DOCUMENT IS PROPRIETARY TO AAA PRODUCTS AND MAY NOT BE DISCLOSED WITHOUT PRIOR WRITTEN CONSENT

D:\Engineering\Product\Valve\Assembly\Classic\SY4DWG\SY4POZ.idw