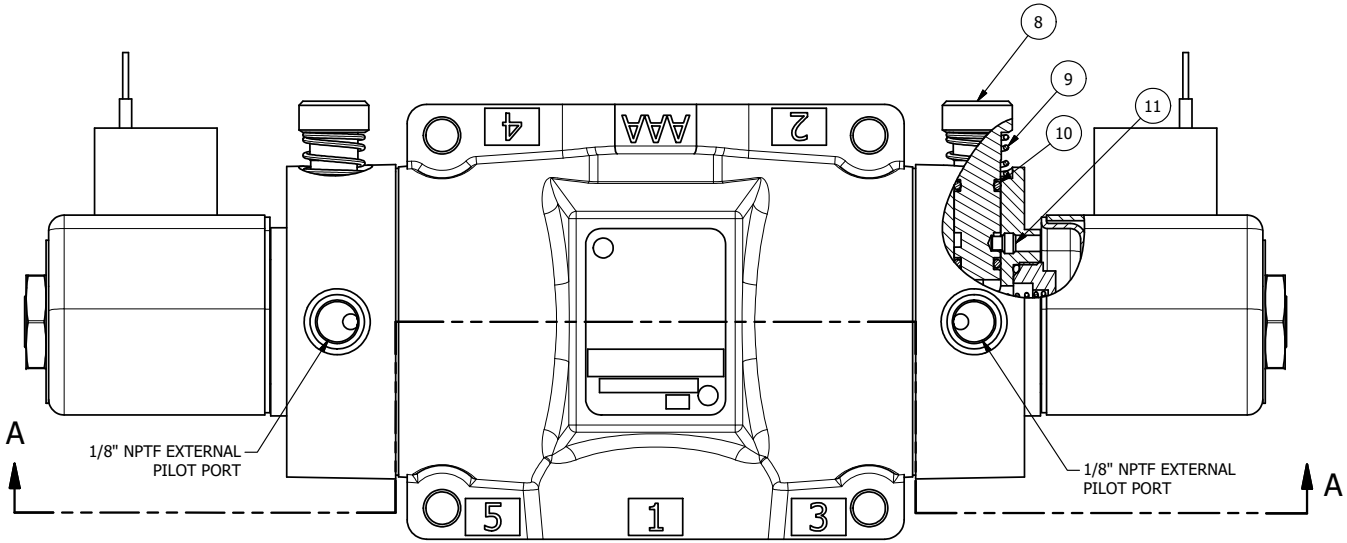

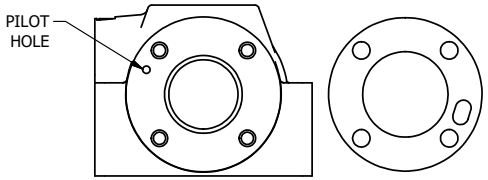

POSITION GASKET TO SEAL PILOT HOLE, BOTH SIDES.
THE ROUND ALUMINUM ADAPTOR IS ROTATED 90 DEGREES.
SUPPLY 50-160 PSI TO 1/8" NPTF PILOT PORT IN ADAPTOR.

NOTES:
1) ALWAYS GIVE VALVE MODEL AND PART NUMBER WHEN ORDERING PARTS.
2) FOR DIFFERENT VOLTAGES OTHER THAN 120/60, REPLACE SOLENOID OPERATOR WITH OPERATOR LISTED IN TABLE BELOW. REFERENCE AY-38 DRAWING FOR REPLACEMENT COILS.

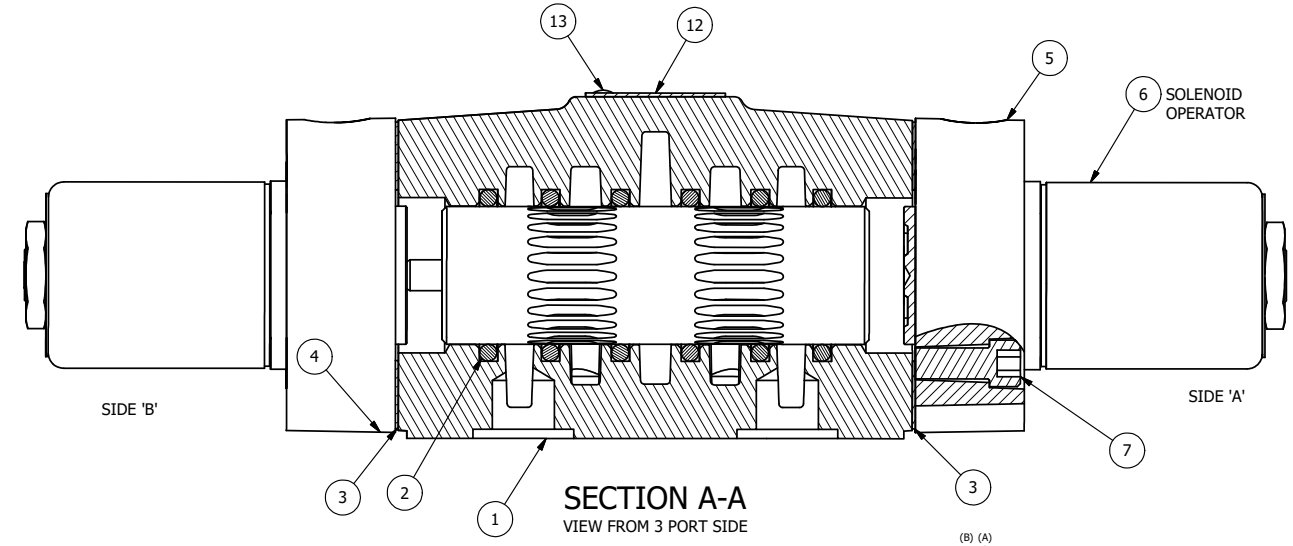

SECTION A-A
VIEW FROM 3 PORT SIDE

FLG	QTY	PART NO	DESCRIPTION
14	1	SPK-4	KIT - SUBPLATE MOUNT, 1/2" SUBPLATE VALVES
13	2	V-212	SCREW, #2 X 3/16 DRIVE, TYPE U, OVAL HEAD, STAINLESS STEEL
12	1	AN-114	NAMEPLATE, BLANK, FOR VALVES WITH SPRINGS OR DETENTS
11	2	V-81	SCREW, 8-32 X 5/16, SOCKET SET, FULL DOG POINT
10	4	V-85	O-RING, BUNA-N, 70 DURO, AS-010, (REF 1/4 X 3/8 X 1/16), CLASSIC OVRD
9	2	OS3	SPRING - MANUAL OVERRIDE, "CLASSIC" SOLENOID
8	2	OP4	PIN , MANUAL OVERRIDE, 1/2", 3/4" & 1" VALVES
7	8	V-47	SCREW, 1/4-20 X 1, SOCKET HEAD CAP
6	2	AY-38-11	CLASSIC SOLENOID - STANDARD, COMPLETE OPERATOR, 120/60
5	1	SSA48-O	ADAPTOR, 'A' SIDE, CLASSIC SOL., OVERRIDE, 1/2", 3/4" & 1" VALVE
4	1	AY-SY4GO-LSO	ASSY - SPR CTR, FLOAT CTR SPL, CLASSIC SOL, LESS OPER, LCKNG OVRD, 1/2" VALVES
3	2	ECG48	GASKET - END CAP, 1/2", 3/4" & 1" VALVE
2	6	V-6	O-RING, BUNA-N, 70 DURO, AS-216, (REF 1-1/8 X 1-3/8 X 1/8), 1/2" VALVES, 1" SUBPLATE
1	1	BP4-1	BODY, 1/2" SUBPLATE, UPPER PILOTS, ANODIZED

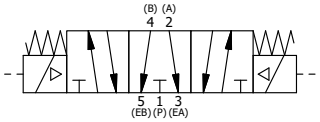

OPERATOR VOLTAGES	
PART NO	REPLACE OPERATOR
SY4PGOZ 240/60	AY-38-17
SY4PGOZ 24VDC	AY-38-8
SY4PGOZ 12VDC	AY-38-5

LIMITS ON DIMENSIONS UNLESS OTHERWISE SPECIFIED
2-PL DECIMAL ± .01
3-PL DECIMAL ± .005
FRACTIONAL ± 1/64
ANGULAR ± 1/2'

AAA PRODUCTS INTERNATIONAL
7114 Harry Hines Blvd
Dallas, TX 75235

DRAWN: RMcKenna DATE: 11/2/2015
CHECKED: KWaite DATE: 11/2/2015
SCALE: 1 : 1 SHEET: 1 OF 1
RELEASED: HWomack DATE: 11/2/2015

TITLE: 1/2" SUBPLATE, DBL SOL, 3 POS., SPR CTR, FLOAT CTR SPL, CLASSIC SOL, 120/60, LCKNG OVRD, EXT PILOT

PART NO.: SY4PGOZ

REV.:

THE INFORMATION CONTAINED WITHIN THIS DOCUMENT IS PROPRIETARY TO AAA PRODUCTS AND MAY NOT BE DISCLOSED WITHOUT PRIOR WRITTEN CONSENT

D:\Engineering\Product\Valve\Assembly\Classic\SY3\SY4\SY4PGOZ.dwg