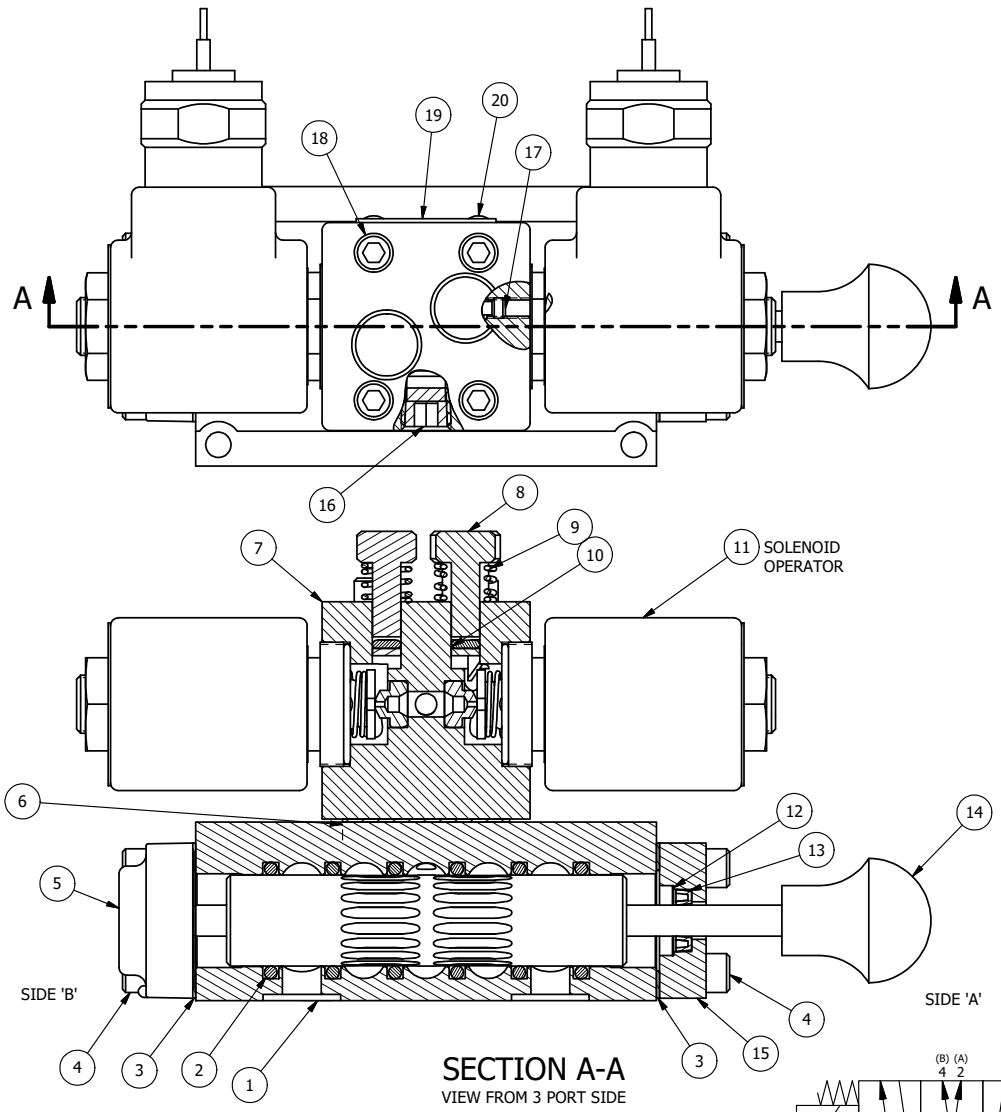


SECTION A-A
VIEW FROM 3 PORT SIDE

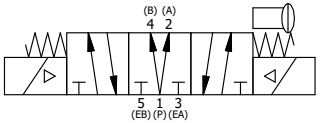


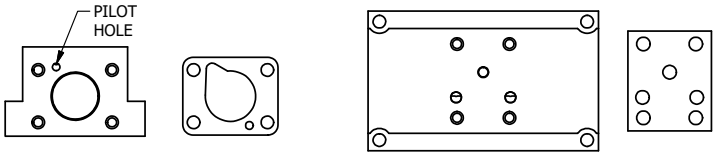


ALIGN PILOT HOLE AND CENTER CUTOUT ON BOTH SIDES.

ALIGN HOLES IN GASKET AS SHOWN.
(FOR EXTERNAL PILOT PRESSURE, REMOVE PIGGY BACK BLOCK AND ROTATE 180°. LEAVE GASKET AS SHOWN. REMOVE 1/8" PLUG AND CONNECT SUPPLY PRESSURE - 160 PSI MAX.)

NOTES:
1) ALWAYS GIVE VALVE MODEL AND PART NUMBER WHEN ORDERING PARTS.
2) FOR DIFFERENT VOLTAGES OTHER THAN 120/60, REPLACE SOLENOID OPERATOR WITH OPERATOR LISTED IN TABLE BELOW. REFERENCE AY-38M DRAWING FOR REPLACEMENT COILS.

| FLG | QTY | PART NO | DESCRIPTION |
|---|---|---|---|
| 21 | 1 | SPK-3 | KIT - SUBPLATE MOUNTING, 3/8" SUBPLATE VALVES |
| 20 | 2 | V-212 | SCREW, #2 X 3/16 DRIVE, TYPE U, OVAL HEAD, STAINLESS STEEL |
| 19 | 1 | AN-114 | NAMEPLATE, BLANK, FOR VALVES WITH SPRINGS OR DETENTS |
| 18 | 4 | V-1 | SCREW, 10-24 X 2, SOCKET HEAD CAP |
| 17 | 2 | V-81 | SCREW, 8-32 X 5/16, SOCKET SET, FULL DOG POINT |
| 16 | 1 | V-19 | PLUG, 1/8-27 NPT, 7/8 TAPER, FLUSH SEAL, SOCKET PIPE PLUG W/LOCTITE RED VIBRA-SEAL |
| 15 | 1 | PEC3-5 | END CAP, INDICATOR PIN, WIPER CAVITY, 6061-T6, 1/4" & 3/8" VALVE |
| 14 | 1 | V-570 | KNOB,BLACK (BRASS 1/4-20 INSERT), OS OPTION |
| 13 | 1 | V-78 | U-CUP, 1/2 X 1/4 X 1/8, NITRILE |
| 12 | 1 | V-119 | RING,CIRCULAR PUSH ON TYPE FOR INDICATOR PIN |
| 11 | 2 | AY-38M-11 | CLASSIC SOLENOID - 1/2" NPT CONDUIT, 120/60 |
| 10 | 2 | V-85 | O-RING, BUNA-N, 70 DURO, AS-010, (REF 1/4 X 3/8 X 1/16), CLASSIC OVRD |
| 9 | 2 | OS3 | SPRING - MANUAL OVERRIDE, "CLASSIC" SOLENOID |
| 8 | 2 | POP-3 | OVERRIDE, PUSH PIN, 303 STAINLESS, 1/4" & 3/8" VALVE |
| 7 | 1 | PB3-4E | ADAPTOR - DBL SOL., W/OVERRIDE, 1/4" & 3/8" VALVES |
| 6 | 1 | PBG3 | GASKET - PIGGY BACK, DOUBLE SOLENOID, 1/4" & 3/8" VALVE |
| 5 | 1 | AY-EY3DOS | ASSY - SPR CTR, REGEN CTR SPL, MAN SPL OVRD, 1/4 & 3/8 VALVES |
| 4 | 8 | V-38 | SCREW, 10-24 X 3/4, SOCKET HEAD CAP |
| 3 | 2 | ECG3 | GASKET - END CAP, 1/4" & 3/8" VALVE |
| 2 | 6 | V-39 | O-RING, VITON, STD BODY, 1/4" & 3/8" VALVES |
| 1 | 1 | BP3-6E | BODY - SOLID, PIGGY BACK, ANODIZED, 3/8" SUBPLATE VALVE |

| OPERATOR VOLTAGES | |
|---|---|
| PART NO | REPLACE OPERATOR |
| SY3PDMOPOS 12VDC | AY-38M-5 |
| SY3PDMOPOS 24VDC | AY-38M-8 |
| SY3PDMOPOS 240/60 | AY-38M-17 |

LIMITS ON DIMENSIONS UNLESS OTHERWISE SPECIFIED
2-PL DECIMAL ± .01
3-PL DECIMAL ± .005
FRACTIONAL ± 1/64
ANGULAR ± 1/2'

AAA PRODUCTS INTERNATIONAL
7114 Harry Hines Blvd
Dallas, TX 75235

DRAWN: RMcKenna DATE: 2/22/2025
CHECKED: KWaite DATE: 2/22/2025
SCALE: 1 : 1 SHEET: 1 OF 1
RELEASED: HWomack DATE: 2/22/2025

TITLE: 3/8" SUBPLATE, DBL SOL, 3 POS, SPR REGEN CTR, MOLD-OVER, 120/60, PUSH OVRD, MAN SPL OVRD

PART NO.: SY3PDMOPOS

REV.:

THE INFORMATION CONTAINED WITHIN THIS DOCUMENT IS PROPRIETARY TO AAA PRODUCTS AND MAY NOT BE DISCLOSED WITHOUT PRIOR WRITTEN CONSENT

D:\Engineering\Product\Valves\Assembly\Classic\SY3PDMOPOS.dw