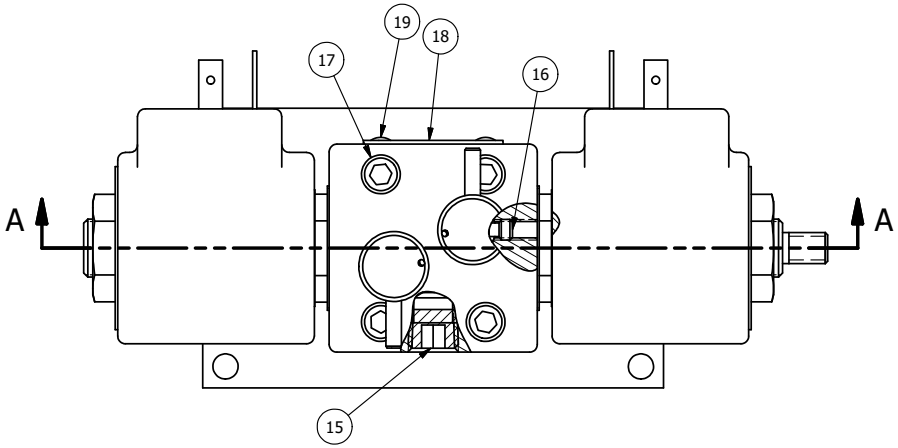

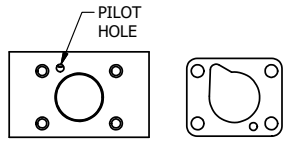

ALIGN PILOT HOLE AND CENTER CUTOUT ON BOTH SIDES.

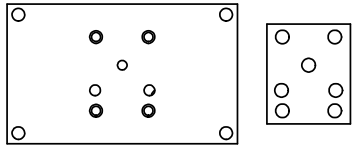

ALIGN HOLES IN GASKET AS SHOWN.
(FOR EXTERNAL PILOT PRESSURE, REMOVE PIGGY BACK BLOCK AND ROTATE 180°. LEAVE GASKET AS SHOWN. REMOVE 1/8" PLUG AND CONNECT SUPPLY PRESSURE - 160 PSI MAX.)

NOTES:
1) ALWAYS GIVE VALVE MODEL AND PART NUMBER WHEN ORDERING PARTS.
2) FOR DIFFERENT VOLTAGES OTHER THAN 120/60, REPLACE SOLENOID OPERATOR WITH OPERATOR LISTED IN TABLE BELOW. REFERENCE AY-38EDT DRAWING FOR REPLACEMENT COILS.

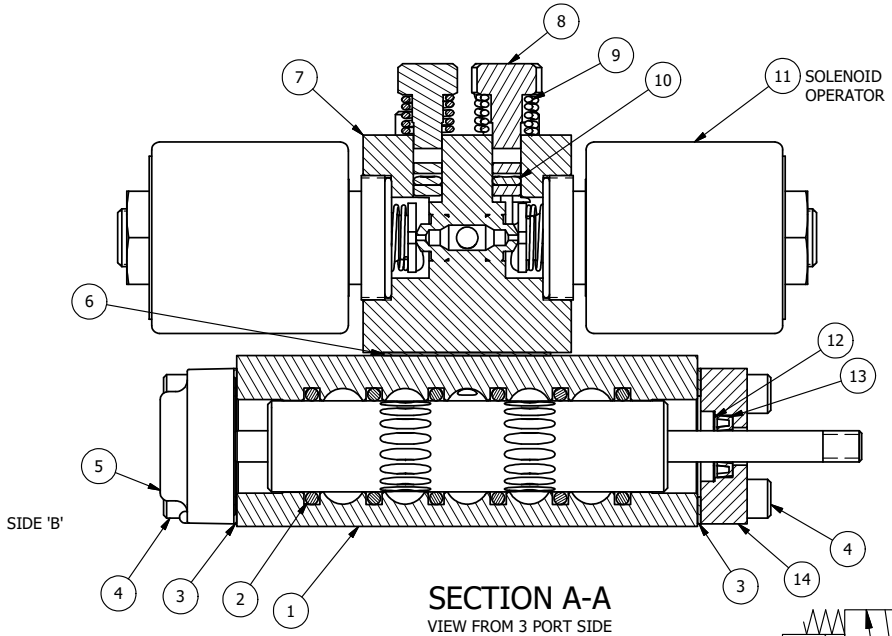

SECTION A-A
VIEW FROM 3 PORT SIDE

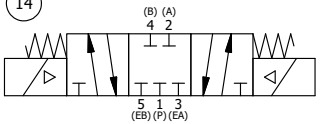

19	2	V-212	SCREW, #2 X 3/16 DRIVE, TYPE U, OVAL HEAD, STAINLESS STEEL
18	1	AN-114	NAMEPLATE, BLANK, FOR VALVES WITH SPRINGS OR DETENTS
17	4	V-1	SCREW, 10-24 X 2, SOCKET HEAD CAP
16	2	V-81	SCREW, 8-32 X 5/16, SOCKET SET, FULL DOG POINT
15	1	V-19	PLUG, 1/8-27 NPT, 7/8 TAPER, FLUSH SEAL, SOCKET PIPE PLUG W/LOCTITE RED VIBRA-SEAL
14	1	PEC3-5	END CAP, INDICATOR PIN, WIPER CAVITY, 6061-T6, 1/4" & 3/8" VALVE
13	1	V-78	U-CUP, 1/2 X 1/4 X 1/8, NITRILE
12	1	V-119	RING,CIRCULAR PUSH ON TYPE FOR INDICATOR PIN
11	2	AY-38EDT-11	CLASSIC SOLENOID - ISO 4400 DIN, 1/8" NPTF SOL EXHST, 120/60
10	2	V-85	O-RING, BUNA-N, 70 DURO, AS-010, (REF 1/4 X 3/8 X 1/16), CLASSIC OVRD
9	2	OS3W	SPRING - OVERRIDE RETURN, "CLASSIC" SOLENOID
8	2	OP3-W	OVERRIDE PIN - SPRING RETURN, 1/4" & 3/8" VALVE
7	1	PB3-4EW	ADAPTOR - DBL SOL., NON-LOCKING OVERRIDE, 1/4" & 3/8" VALVE
6	1	PBG3	GASKET - PIGGY BACK, DOUBLE SOLENOID, 1/4" & 3/8" VALVE
5	1	AY-EY3OS	ASSY - SPR CTR, CLSD CTR SPL, MAN SPL OVRD, 1/4 & 3/8 VALVES
4	8	V-38	SCREW, 10-24 X 3/4, SOCKET HEAD CAP
3	2	ECG3	GASKET - END CAP, 1/4" & 3/8" VALVE
2	6	V-39	O-RING, VITON, STD BODY, 1/4" & 3/8" VALVES
1	1	B3-6E	BODY - SOLID, PIGGY BACK, ANODIZED, 3/8" SIDE PORT VALVE
FLG	QTY	PART NO	DESCRIPTION

OPERATOR VOLTAGES	
PART NO	REPLACE OPERATOR
SY3EDONTK 12VDC	AY-38EDT-5
SY3EDONTK 24VDC	AY-38EDT-8
SY3EDONTK 240/60	AY-38EDT-17

LIMITS ON DIMENSIONS UNLESS OTHERWISE SPECIFIED
2-PL DECIMAL ± .01
3-PL DECIMAL ± .005
FRACTIONAL ± 1/64
ANGULAR ± 1/2'

AAA PRODUCTS INTERNATIONAL
7114 Harry Hines Blvd
Dallas, TX 75235

DRAWN: RMcKenna DATE: 2/21/2025
CHECKED: KWaite DATE: 2/21/2025
SCALE: 1 : 1 SHEET: 1 OF 1
RELEASED: HWomack DATE: 2/21/2025

TITLE:
3/8" SIDE PORT, DBL SOL, 3 POS, SPR CLSD CTR, ISO 4400, 120/60, NON-LCKNG OVRD, EXCLDR, SPL OVRD

PART NO.: SY3EDONTK
REV.:

THE INFORMATION CONTAINED WITHIN THIS DOCUMENT IS PROPRIETARY TO AAA PRODUCTS AND MAY NOT BE DISCLOSED WITHOUT PRIOR WRITTEN CONSENT

D:\Engineering\Product\Valves\Assembly\Classic\SY3\WG\SY3EDONTK.dw