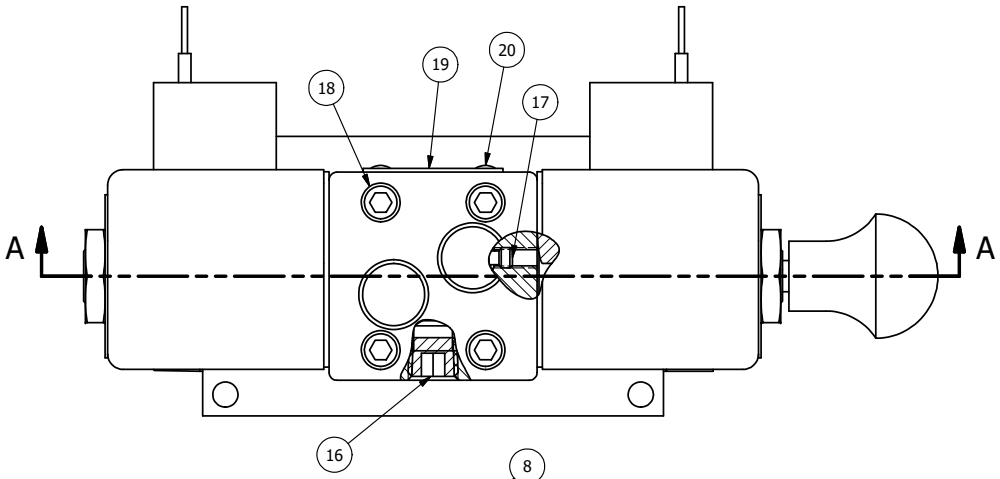

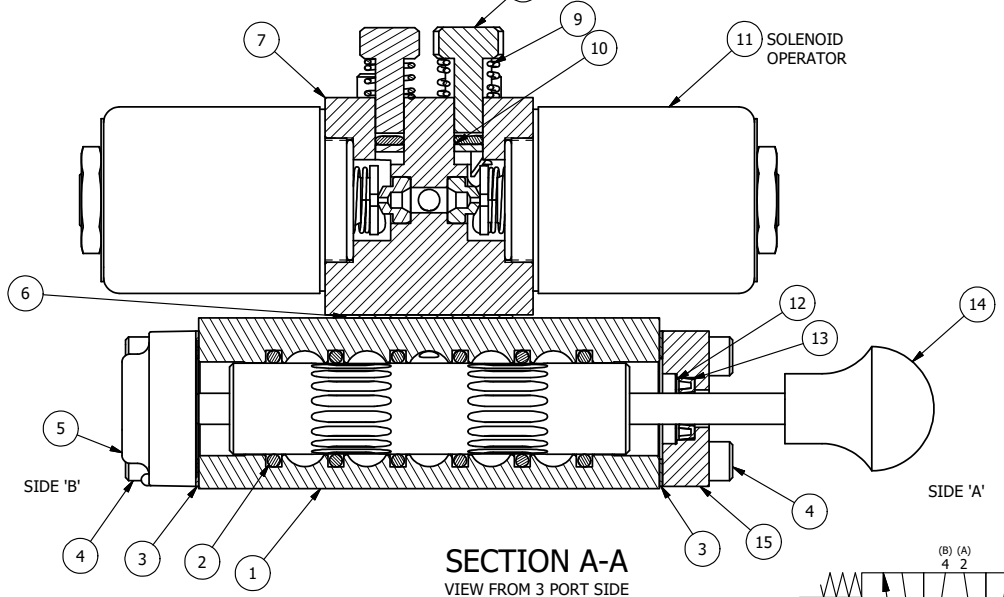

SECTION A-A

VIEW FROM 3 PORT SIDE

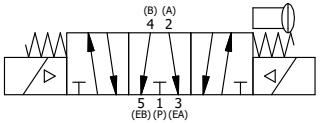

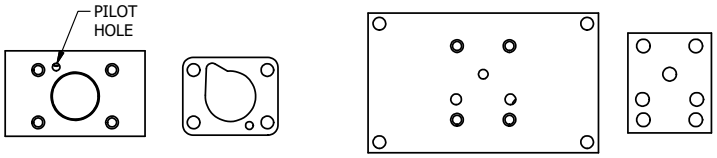

ALIGN PILOT HOLE AND CENTER CUTOUT ON BOTH SIDES.

ALIGN HOLES IN GASKET AS SHOWN. (FOR EXTERNAL PILOT PRESSURE, REMOVE PIGGY BACK BLOCK AND ROTATE 180°. LEAVE GASKET AS SHOWN. REMOVE 1/8" PLUG AND CONNECT SUPPLY PRESSURE - 160 PSI MAX.)

NOTES:
1) ALWAYS GIVE VALVE MODEL AND PART NUMBER WHEN ORDERING PARTS.
2) FOR DIFFERENT VOLTAGES OTHER THAN 120/60, REPLACE SOLENOID OPERATOR WITH OPERATOR LISTED IN TABLE BELOW. REFERENCE AY-38 DRAWING FOR REPLACEMENT COILS.

FLG	QTY	PART NO	DESCRIPTION
20	2	V-212	SCREW, #2 X 3/16 DRIVE, TYPE U, OVAL HEAD, STAINLESS STEEL
19	1	AN-114	NAMEPLATE, BLANK, FOR VALVES WITH SPRINGS OR DETENTS
18	4	V-1	SCREW, 10-24 X 2, SOCKET HEAD CAP
17	2	V-81	SCREW, 8-32 X 5/16, SOCKET SET, FULL DOG POINT
16	1	V-19	PLUG, 1/8-27 NPT, 7/8 TAPER, FLUSH SEAL, SOCKET PIPE PLUG W/LOCTITE RED VIBRA-SEAL
15	1	PEC3-5	END CAP, INDICATOR PIN, WIPER CAVITY, 6061-T6, 1/4" & 3/8" VALVE
14	1	V-570	KNOB,BLACK (BRASS 1/4-20 INSERT), OS OPTION
13	1	V-78	U-CUP, 1/2 X 1/4 X 1/8, NITRILE
12	1	V-119	RING,CIRCULAR PUSH ON TYPE FOR INDICATOR PIN
11	2	AY-38-11	CLASSIC SOLENOID - STANDARD, COMPLETE OPERATOR, 120/60
10	2	V-85	O-RING, BUNA-N, 70 DURO, AS-010, (REF 1/4 X 3/8 X 1/16), CLASSIC OVRD
9	2	OS3	SPRING - MANUAL OVERRIDE, "CLASSIC" SOLENOID
8	2	POP-3	OVERRIDE, PUSH PIN, 303 STAINLESS, 1/4" & 3/8" VALVE
7	1	PB3-4E	ADAPTOR - DBL SOL., W/OVERRIDE, 1/4" & 3/8" VALVES
6	1	PBG3	GASKET - PIGGY BACK, DOUBLE SOLENOID, 1/4" & 3/8" VALVE
5	1	AY-EY3GOS	ASSY - SPR CTR, FLOAT CTR SPL, MAN SPL OVRD, 1/4 & 3/8 VALVES
4	8	V-38	SCREW, 10-24 X 3/4, SOCKET HEAD CAP
3	2	ECG3	GASKET - END CAP, 1/4" & 3/8" VALVE
2	6	V-39	O-RING, VITON, STD BODY, 1/4" & 3/8" VALVES
1	1	B2-6E	BODY - SOLID, PIGGY BACK, ANODIZED, 1/4" SIDE PORT VALVE

OPERATOR VOLTAGES	
PART NO	REPLACE OPERATOR
SY2GOPOS 12VDC	AY-38-5
SY2GOPOS 24VDC	AY-38-8
SY2GOPOS 240/60	AY-38-17

LIMITS ON DIMENSIONS UNLESS OTHERWISE SPECIFIED
2-PL DECIMAL ± .01
3-PL DECIMAL ± .005
FRACTIONAL ± 1/64
ANGULAR ± 1/2'

AAA PRODUCTS INTERNATIONAL
7114 Harry Hines Blvd
Dallas, TX 75235

DRAWN: RMcKenna DATE: 2/23/2025
CHECKED: KWaite DATE: 2/23/2025
SCALE: 1 : 1 SHEET: 1 OF 1
RELEASED: HWomack DATE: 2/23/2025

TITLE: 1/4" SIDE PORT, DBL SOL, 3 POS, SPR FLOAT CTR, CLASSIC, 120/60, PUSH OVRD, MAN SPL OVRD

PART NO.: SY2GOPOS

REV.:

THE INFORMATION CONTAINED WITHIN THIS DOCUMENT IS PROPRIETARY TO AAA PRODUCTS AND MAY NOT BE DISCLOSED WITHOUT PRIOR WRITTEN CONSENT

D:\Engineering\Product\Valves\Assembly\Classic\SY2\SY2GOPOS.idw