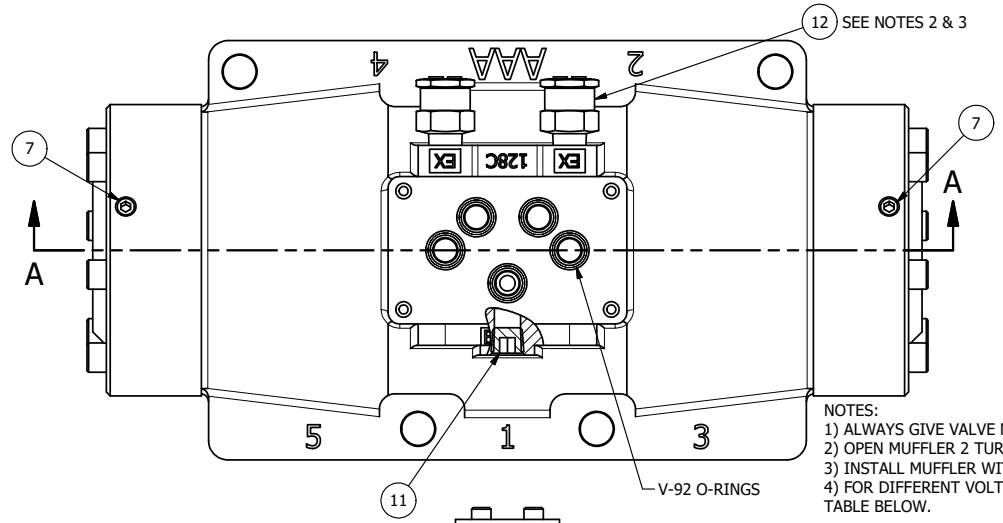

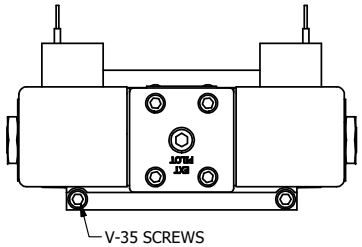

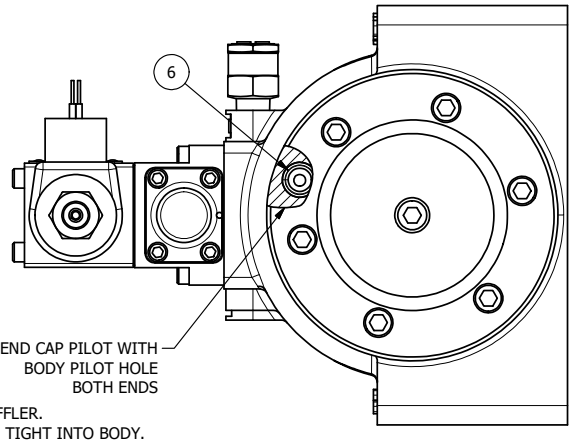

NOTES:
1) ALWAYS GIVE VALVE MODEL AND PART NUMBER WHEN ORDERING.
2) OPEN MUFFLER 2 TURNS FROM CLOSED POSITION. TIGHTEN LOCK NUT ON MUFFLER.
3) INSTALL MUFFLER WITH MAGNALUBE-G GREASE 1 TO 1-1/2 TURNS FROM HAND TIGHT INTO BODY.
4) FOR DIFFERENT VOLTAGES OTHER THAN 120/60, REPLACE TOP CONTROL VALVE WITH VALVE LISTED IN TABLE BELOW.

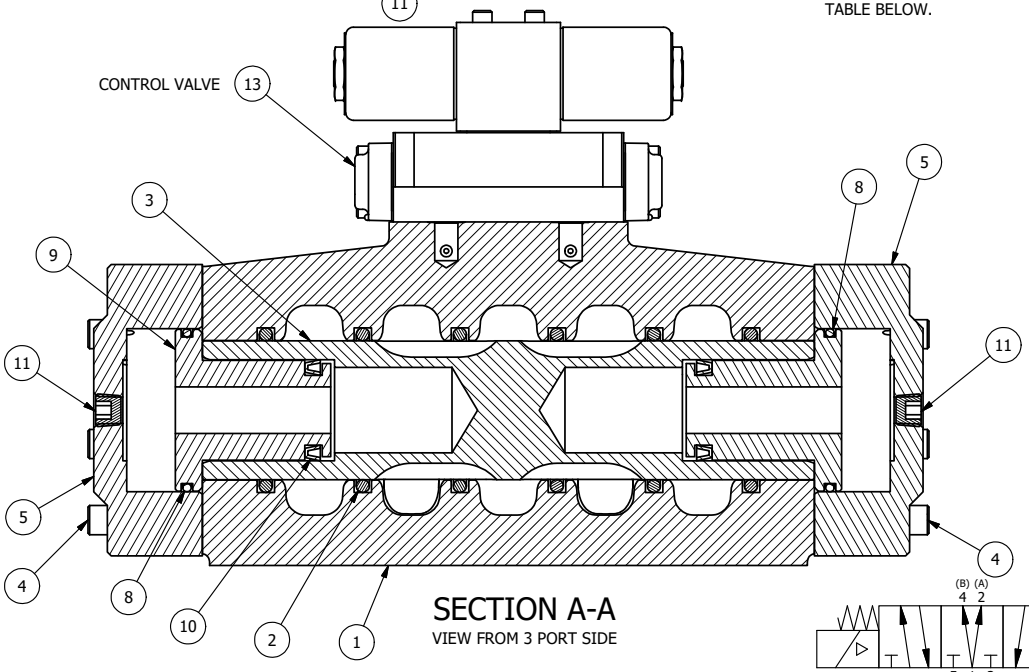

SECTION A-A
VIEW FROM 3 PORT SIDE

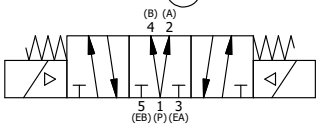

CONTROL VALVE VOLTAGES	
PART NO	REPLACE WITH
SY12D 240/60	SY3PD 240/60
SY12D 24VDC	SY3PD 24VDC
SY12D 12VDC	SY3PD 12VDC

THE FOLLOWING PARTS ARE INCLUDED WITH THE SUBPLATE VALVE AND ARE USED TO ASSEMBLE.		
QTY	PART NO	DESCRIPTION
5	V-92	O-RING, BUNA-N, 70 DURO, AS-014, (REF 1/2 X 5/8 X 1/16), 3/8" SUBPLATE
4	V-35	SCREW, 10-24 X 7/8, SOCKET HEAD CAP

13	1	SY3PD	3/8" SUBPLATE, DBL SOL, 3 POS, SPR CTR, SOL SHFT, REGEN CTR SPL, CLASSIC SOL, 120/60
12	2	MFC2	ASSEMBLY - MUFFLER FLOW CONTROL, 1/4" NPT
11	3	V-337	PLUG, SOCKET 1/4-18 FLUSH SEAL PLUG
10	2	V-129	U-CUP, 1-5/8 X 1-1/8 X 1/4, NITRILE
9	2	SPC12	SPOOL - PRESS. CTR, 1 1/2" & 2" VALVE
8	2	V-128	O-RING, BUNA-N, 70 DURO, AS-229, (REF 2-3/8 X 2-5/8 X 1/8), 3 POS, 1-1/2" & 2" VALVES
7	2	V-231	PLUG, SOCKET PRESSURE 1/16-27X 7/8 TAPER FOR 122V,192V,FOR EC
6	2	V-89	O-RING, BUNA-N, 70 DURO, AS-110, (REF 3/8 X 9/16 X 3/32), 1" & 2" SUBPLATE PILOT
5	2	PCE12E	ENDCAP - PRESSURE CTR, SOLID, 6061-T6 AL, 1-1/2" & 2" VALVES
4	12	V-143	SCREW, 5/16-18 X 2, SOCKET HEAD CAP
3	1	S12D	SPOOL - 'D', REGEN CTR, 1 1/2" & 2" VALVE
2	6	V-123	O-RING, BUNA-N, 70 DURO, AS-331, (REF 2-1/4 X 2-5/8 X 3/16), 1-1/2" & 2" VALVES
1	1	B12-6	BODY, 1 1/2" SIDE PORT, PIGGY BACK
FLG	QTY	PART NO	DESCRIPTION

LIMITS ON DIMENSIONS UNLESS OTHERWISE SPECIFIED
2-PL DECIMAL ± .01
3-PL DECIMAL ± .005
FRACTIONAL ± 1/64
ANGULAR ± 1/2'

AAA PRODUCTS INTERNATIONAL
7114 Harry Hines Blvd
Dallas, TX 75235

DRAWN: RMcKenna DATE: 4/27/2015
CHECKED: KWaite DATE: 5/31/2015
SCALE: 1/2 SHEET: 1 OF 1
RELEASED: HWomack DATE: 5/31/2015

TITLE:
1-1/2" SIDE PORT, DBL SOL, 3 POS, PRESS CTR, SOL SHFT, REGEN CTR SPL, CLASSIC SOL, 120/60

PART NO.: SY12D
REV.:

D:\Engineering\Product\Valve\Assembly\Classic\SY12D\SY12D.dfw

THE INFORMATION CONTAINED WITHIN THIS DOCUMENT IS PROPRIETARY TO AAA PRODUCTS AND MAY NOT BE DISCLOSED WITHOUT PRIOR WRITTEN CONSENT