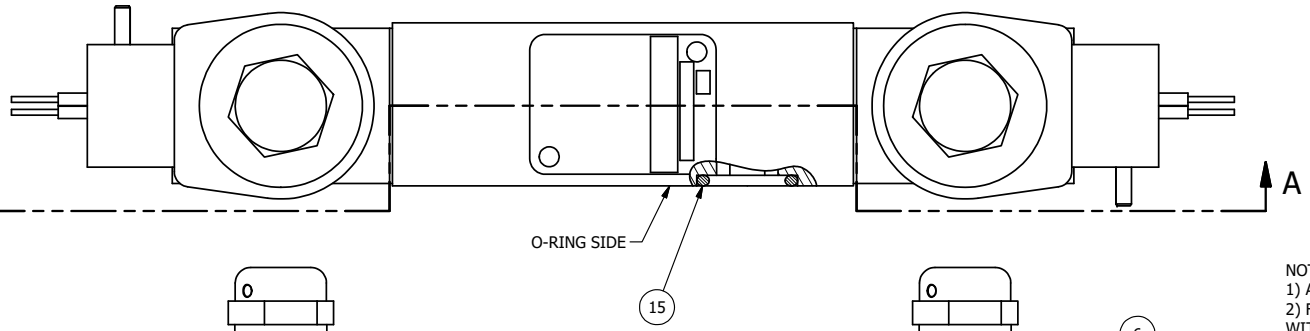

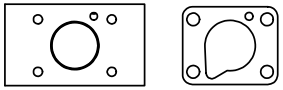

POSITION GASKET ON END OF VALVE
TO ALIGN PILOT HOLES,
BOTH ENDS (SIDE 'B' SHOWN)

NOTES:
1) ALWAYS GIVE VALVE MODEL AND PART NUMBER WHEN ORDERING PARTS.
2) FOR DIFFERENT VOLTAGES OTHER THAN 120/60, REPLACE SOLENOID OPERATOR WITH OPERATOR LISTED IN TABLE BELOW. REFERENCE AY-38L DRAWING FOR REPLACEMENT COILS.

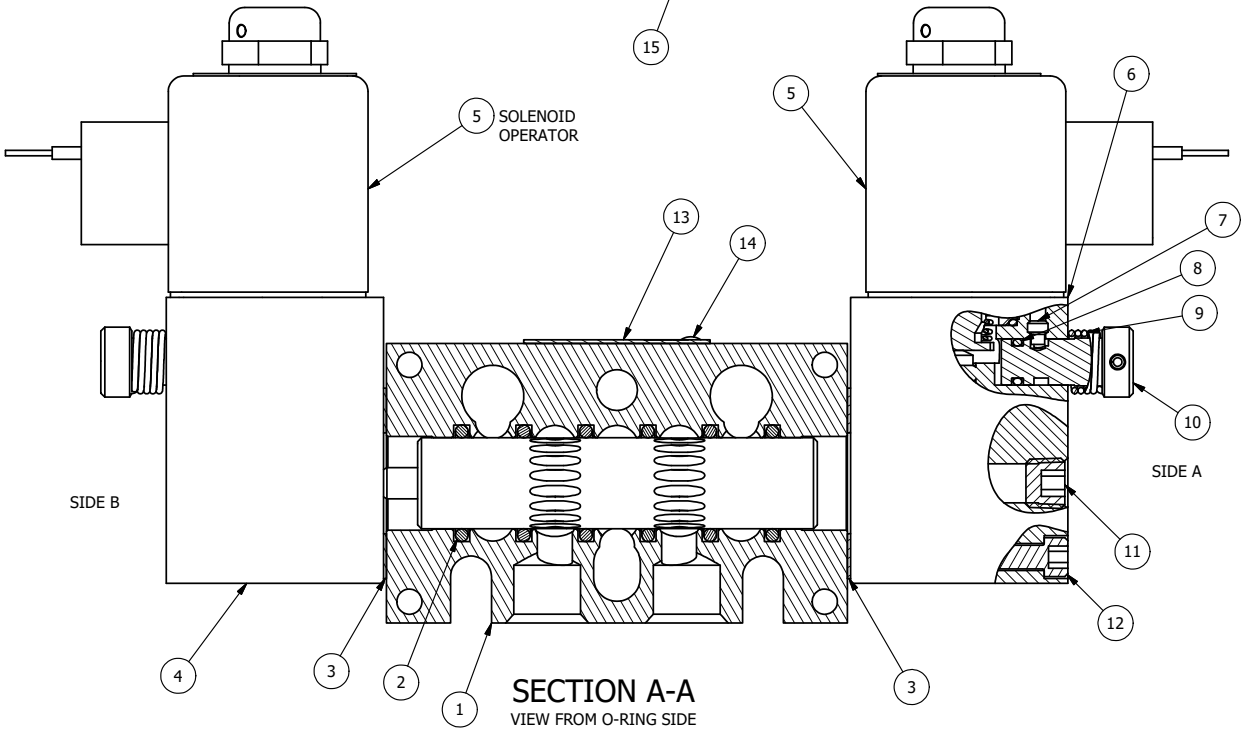

SECTION A-A
VIEW FROM O-RING SIDE

FLG	QTY	PART NO	DESCRIPTION
15	3	V-110	O-RING, BUNA-N, 70 DURO, AS-114, (REF 5/8 X 13/16 X 3/32), 1/4" SLEEVE, 1/2" SUB, STACK
14	2	V-212	SCREW, #2 X 3/16 DRIVE, TYPE U, OVAL HEAD, STAINLESS STEEL
13	1	AN-114	NAMEPLATE, BLANK, FOR VALVES WITH SPRINGS OR DETENTS
12	8	V-1	SCREW, 10-24 X 2, SOCKET HEAD CAP
11	2	V-19	PLUG, SOCKET PIPE 1/8" NPT (#601-3 PITTSBURG PLUG PART #.)
10	2	OP3-W	OVERRIDE PIN - SPRING RETURN, 1/4" & 3/8" VALVE
9	2	OS3W	SPRING - OVERRIDE RETURN, "CLASSIC" SOLENOID
8	2	V-85	O-RING, BUNA-N, 70 DURO, AS-010, (REF 1/4 X 3/8 X 1/16), CLASSIC OVRD
7	2	V-81	SCREW, 8-32 X 5/16, SOCKET SET, FULL DOG POINT
6	1	PB3-6EW	ADAPTOR - SNGL SOL., NON-LOCKING OVERRIDE, 1/4" & 3/8" STACK VALVE
5	2	AY-38L-11	CLASSIC SOLENOID, 120/60, W/DUST EXCLUDER
4	1	AY-BSY3ON	ASSY - SPR CTR, CLSD CTR SPL, LESS OPER, NON-LCKNG OVRD, STACK VALVES
3	2	ECG3	GASKET - END CAP, 1/4" & 3/8" VALVE
2	6	V-39	O-RING, VITON, STD BODY, 1/4" & 3/8" VALVES
1	1	B3-10E	FINISHED - SOLID BODY, UPPER PILOTS, 3/8" STACKING VALVE

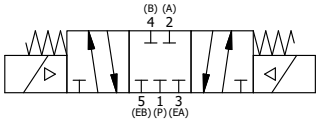

OPERATOR VOLTAGES	
PART NO	REPLACE OPERATOR
BSY3ONL 12VDC	AY-38L-5
BSY3ONL 24VDC	AY-38L-8
BSY3ONL 240/60	AY-38L-17

LIMITS ON DIMENSIONS UNLESS OTHERWISE SPECIFIED
2-PL DECIMAL ± .01
3-PL DECIMAL ± .005
FRACTIONAL ± 1/64
ANGULAR ± 1/2'

AAA PRODUCTS INTERNATIONAL
7114 Harry Hines Blvd
Dallas, TX 75235

DRAWN: RMcKenna DATE: 5/3/2020
CHECKED: KWaite DATE: 5/3/2020
SCALE: 1 : 1 SHEET: 1 OF 1
RELEASED: HWomack DATE: 5/3/2020

TITLE: 3/8" STACK, DBL SOL, 3 POS, CLSD SPR CTR, CLASSIC, 120/60, NON-LCKNG OVRD, EXCLDR

PART NO.: BSY3ONL

REV.:

THE INFORMATION CONTAINED WITHIN THIS DOCUMENT IS PROPRIETARY TO AAA PRODUCTS AND MAY NOT BE DISCLOSED WITHOUT PRIOR WRITTEN CONSENT

D:\Engineering\Product\Valve\Assembly\Classic\SYS\V6\BSY3ONL.dw