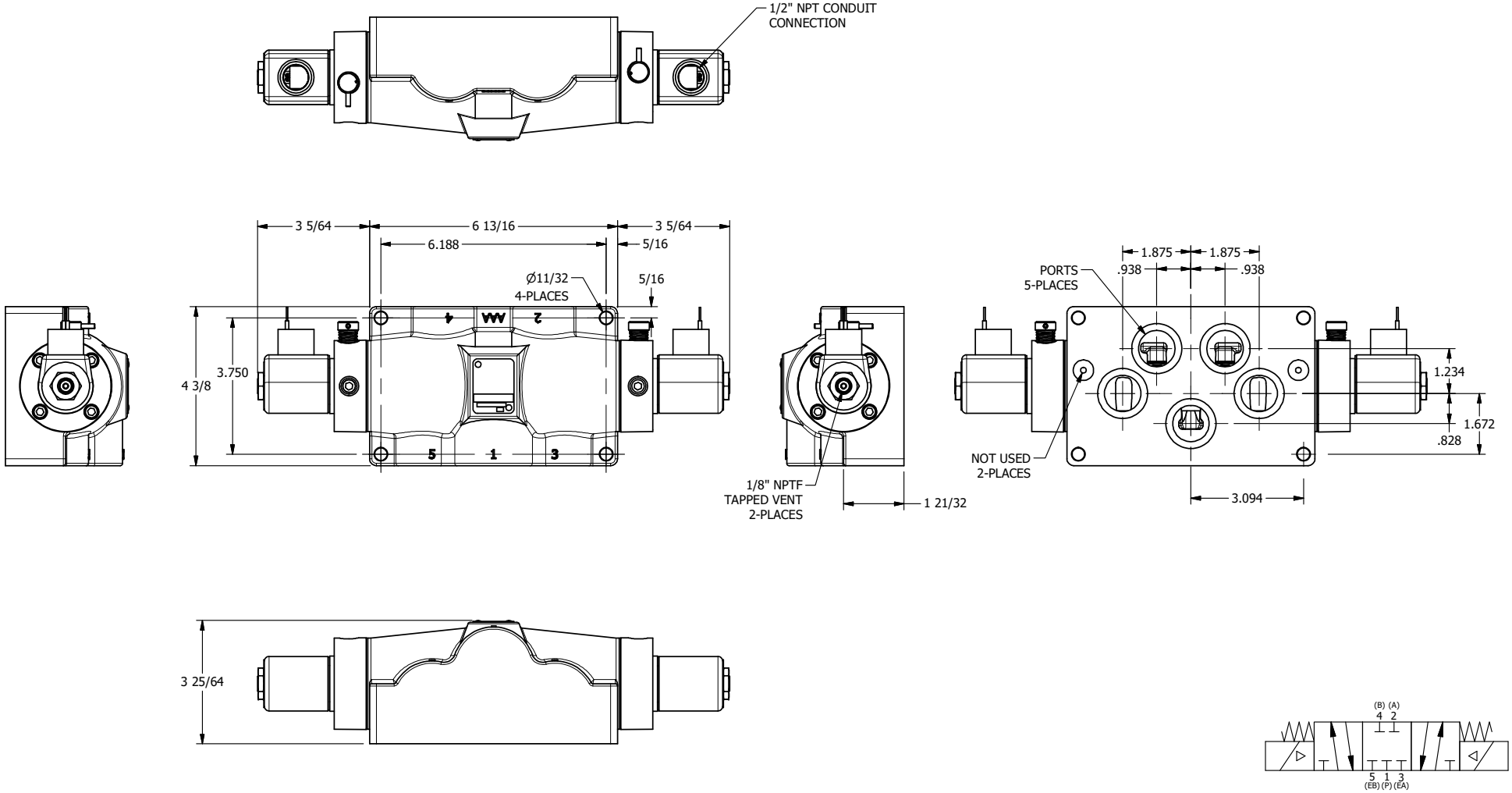

AAA PRODUCTS INTERNATIONAL 7114 Harry Hines Blvd Dallas, TX 75235	TITLE: 1" SUBPLATE, DBL SOL, 3 POS, CLSD SPR CTR, CLASSIC, NON-LCKNG OVRD, TPD VENT	DRAWING NO.: DIM_SY8PONT

THE INFORMATION CONTAINED WITHIN THIS DOCUMENT IS PROPRIETARY TO AAA PRODUCTS AND MAY NOT BE DISCLOSED WITHOUT PRIOR WRITTEN CONSENT