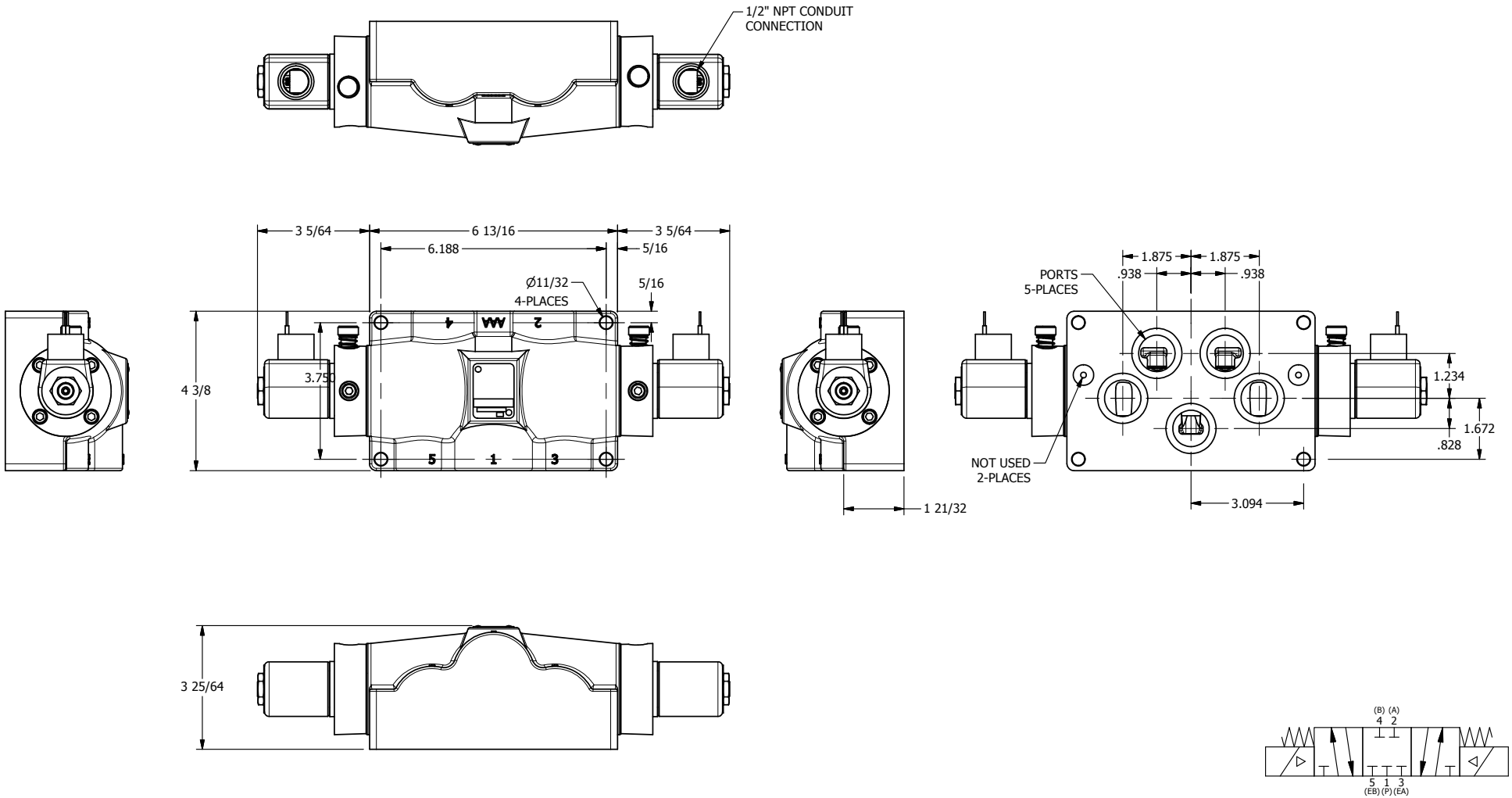

AAA PRODUCTS INTERNATIONAL
7114 Harry Hines Blvd
Dallas, TX 75235

TITLE: 1" SUBPLATE, DBL SOL, 3 POS, SPR CTR, SOL RTRN, CLSD CTR SPL, CLASSIC SOL, LCKNG OVRD

DRAWING NO.: DIM_SY8PO

THE INFORMATION CONTAINED WITHIN THIS DOCUMENT IS PROPRIETARY TO AAA PRODUCTS AND MAY NOT BE DISCLOSED WITHOUT PRIOR WRITTEN CONSENT