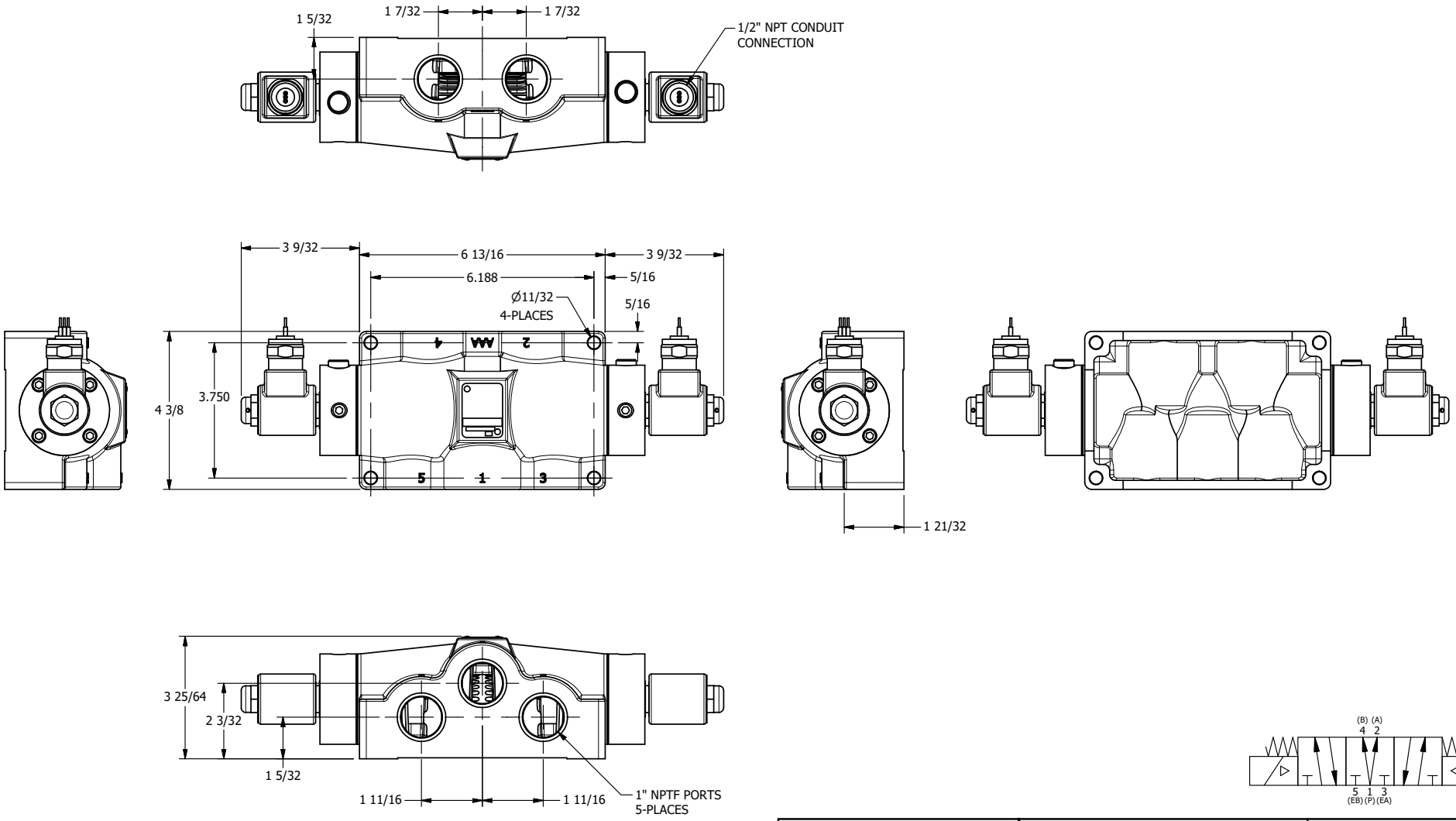

AAA PRODUCTS INTERNATIONAL
7114 Harry Hines Blvd
Dallas, TX 75235

TITLE: 1" SIDE PORT, DBL SOL, 3 POS, SPR REGEN CTR, MOLD-OVER, PUSH OVRD, DUST EXCLDR

DRAWING NO.: DIM_SY8DMOPL

THE INFORMATION CONTAINED WITHIN THIS DOCUMENT IS PROPRIETARY TO AAA PRODUCTS AND MAY NOT BE DISCLOSED WITHOUT PRIOR WRITTEN CONSENT