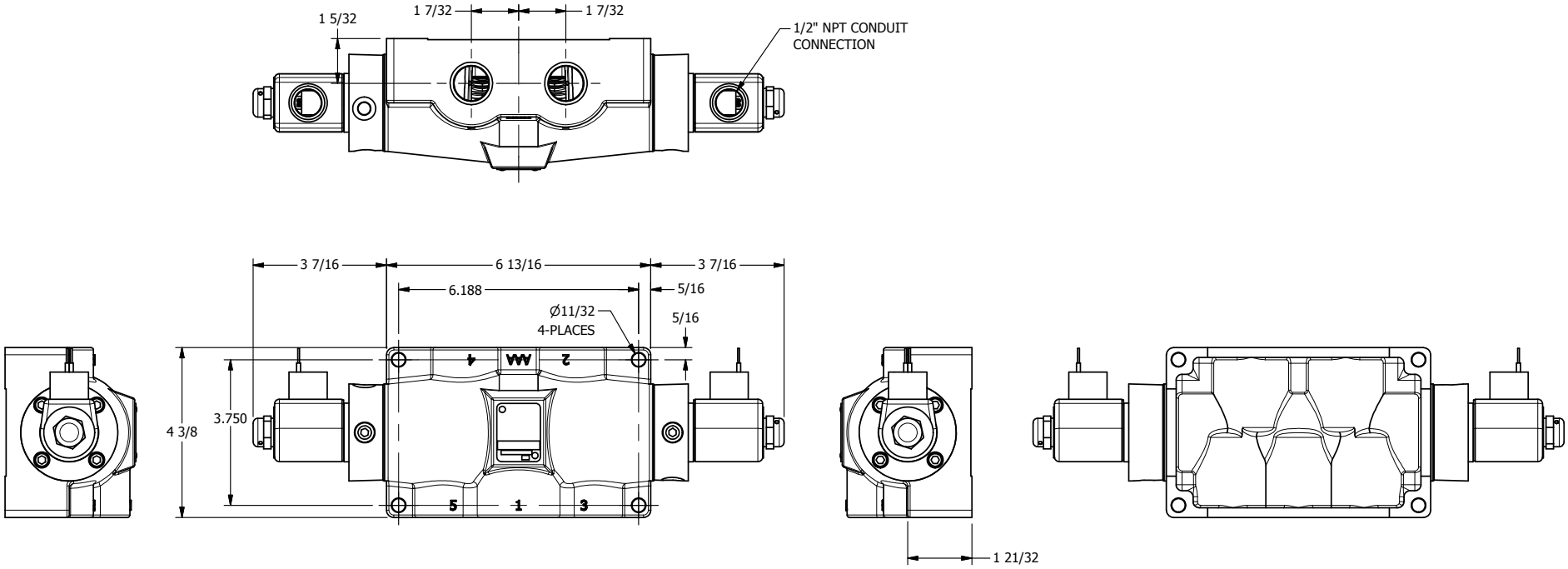

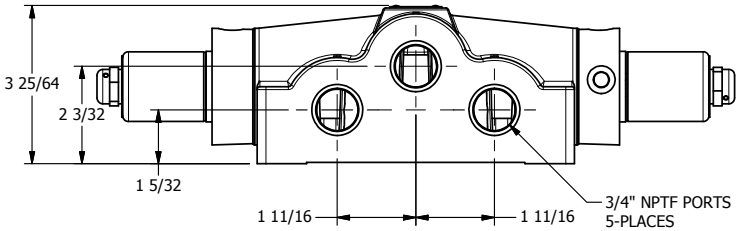

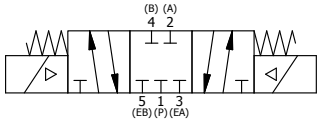

AAA PRODUCTS INTERNATIONAL 7114 Harry Hines Blvd Dallas, TX 75235	TITLE: 3/4" SIDE PORT, DBL SOL, 3 POS, SPR CTR, SOL RTRN, CLSD CTR SPL, CLASSIC SOL, DUST EXCLDR	DRAWING NO.: DIM_SY6L

THE INFORMATION CONTAINED WITHIN THIS DOCUMENT IS PROPRIETARY TO AAA PRODUCTS AND MAY NOT BE DISCLOSED WITHOUT PRIOR WRITTEN CONSENT