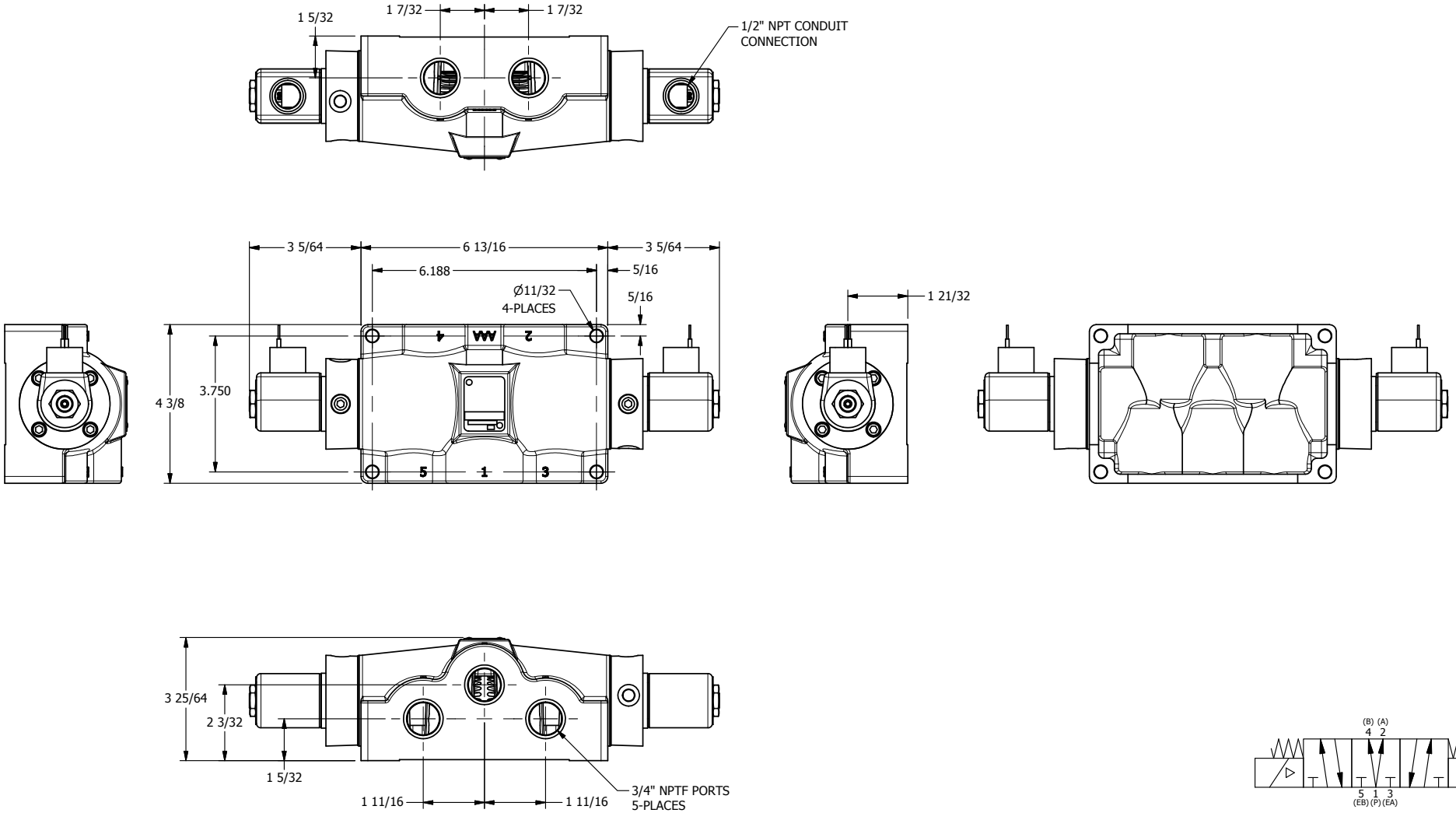

AAA PRODUCTS INTERNATIONAL
7114 Harry Hines Blvd
Dallas, TX 75235

TITLE: 3/4" SIDE PORT, DBL SOL, 3 POS, SPR CTR, SOL RTRN, REGEN CTR SPL, CLASSIC SOL

PART NO.: DIM_SY6D

THE INFORMATION CONTAINED WITHIN THIS DOCUMENT IS PROPRIETARY TO AAA PRODUCTS AND MAY NOT BE DISCLOSED WITHOUT PRIOR WRITTEN CONSENT