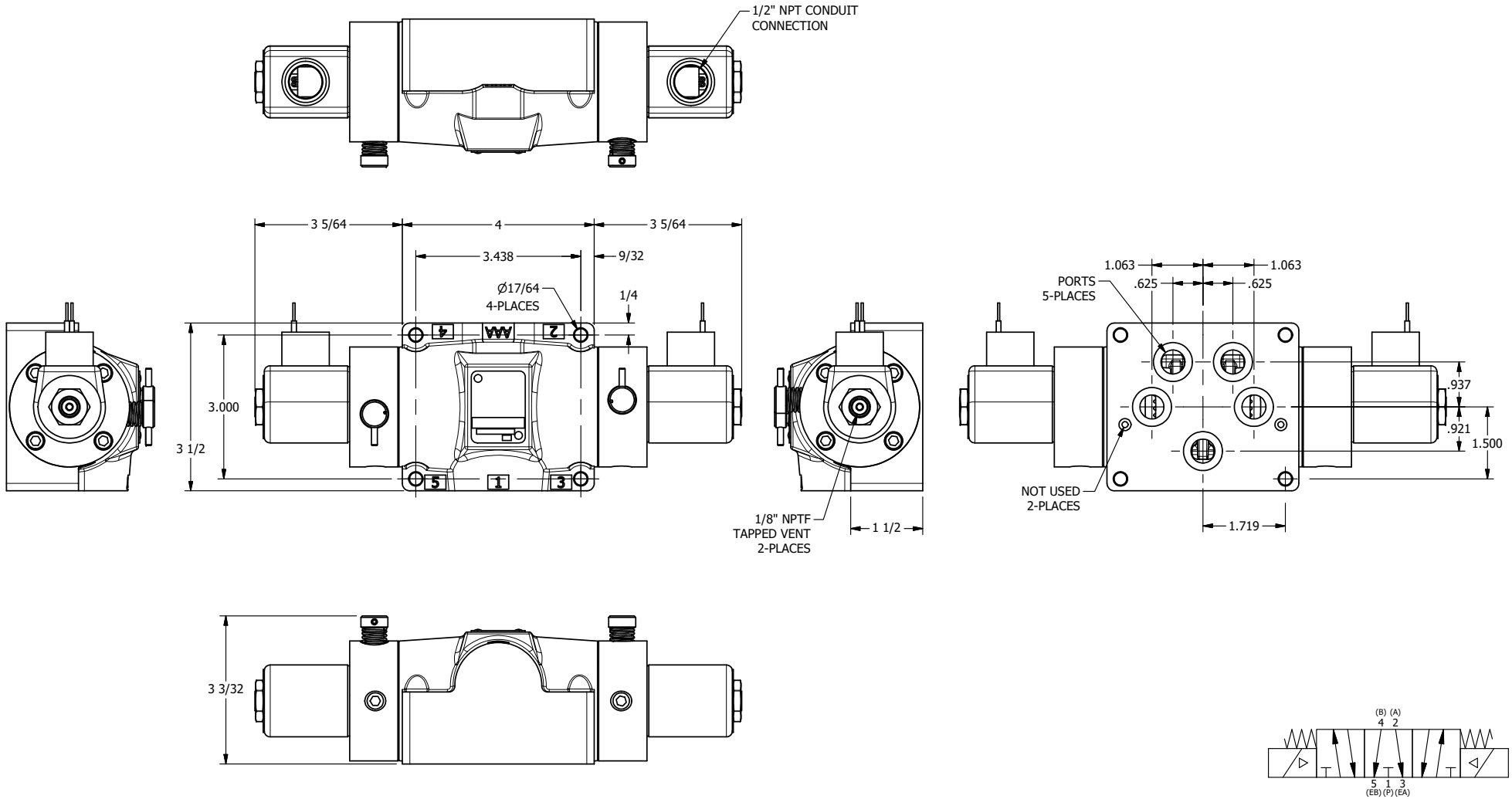


| | | |
|---|---|---|
| **AAA PRODUCTS INTERNATIONAL**<br>7114 Harry Hines Blvd<br>Dallas, TX 75235 | TITLE: 1/2" SUBPLATE, DBL SOL, 3 POS, FLOAT SPR CTR, CLASSIC, NON-LCKNG OVRD, TPD VENT | DRAWING NO.: DIM_SY4PGONT |

THE INFORMATION CONTAINED WITHIN THIS DOCUMENT IS PROPRIETARY TO AAA PRODUCTS AND MAY NOT BE DISCLOSED WITHOUT PRIOR WRITTEN CONSENT