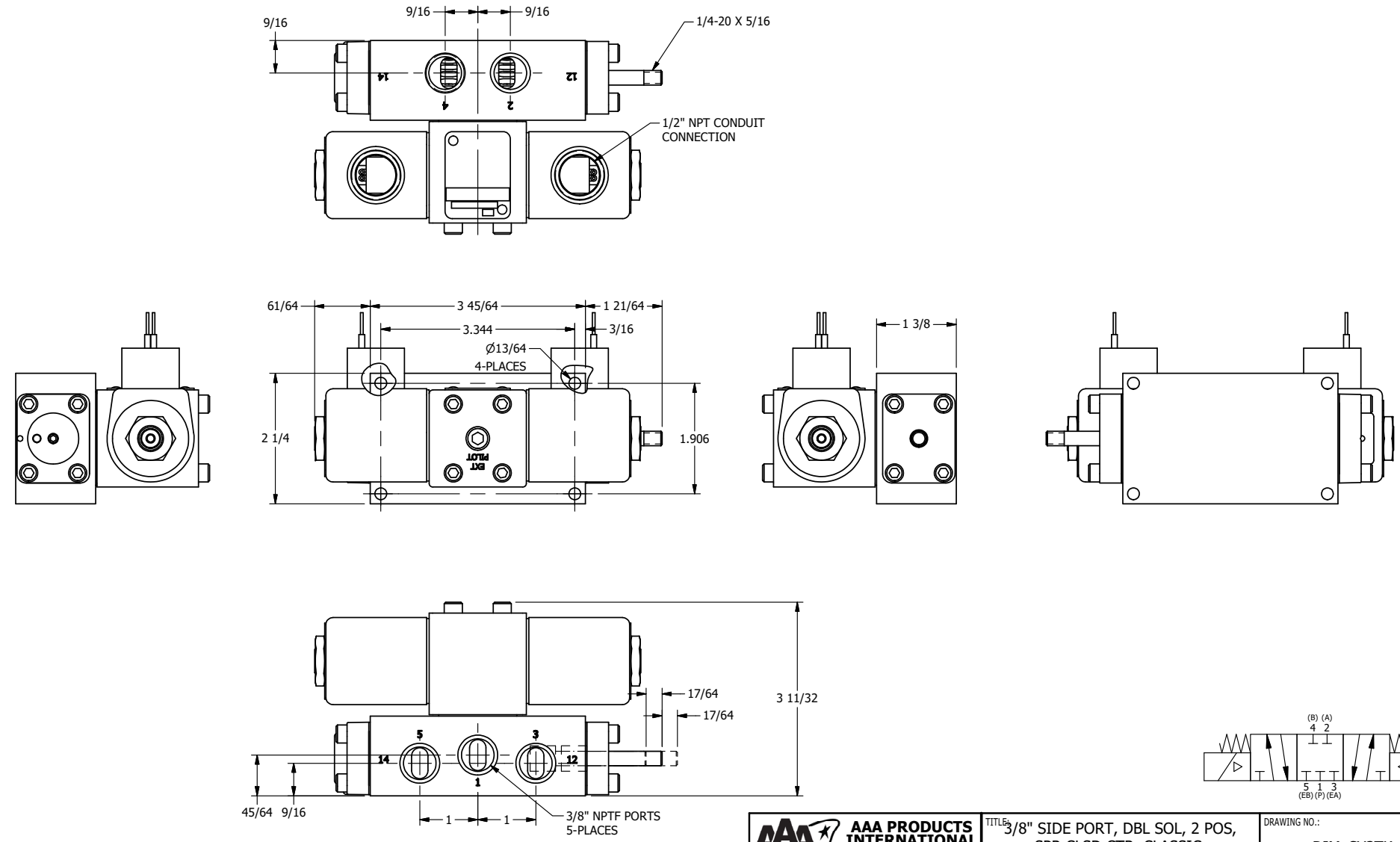

AAA PRODUCTS INTERNATIONAL
7114 Harry Hines Blvd
Dallas, TX 75235

TITLE: 3/8" SIDE PORT, DBL SOL, 2 POS, SPR CLSD CTR, CLASSIC, TAPPED VENT, THD INDCTR PIN

DRAWING NO.: DIM_SY3TK

THE INFORMATION CONTAINED WITHIN THIS DOCUMENT IS PROPRIETARY TO AAA PRODUCTS AND MAY NOT BE DISCLOSED WITHOUT PRIOR WRITTEN CONSENT