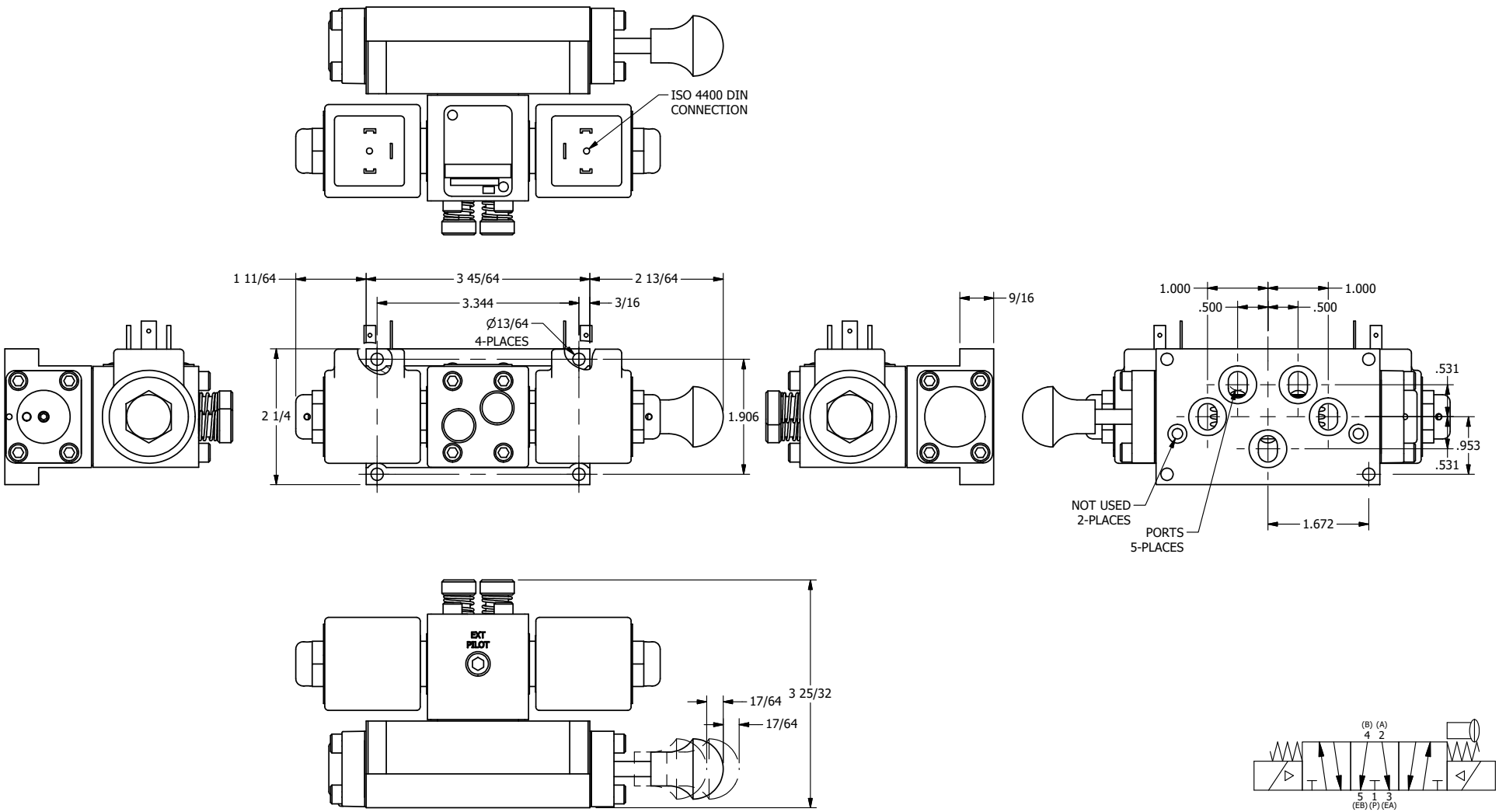

AAA PRODUCTS INTERNATIONAL
7114 Harry Hines Blvd
Dallas, TX 75235

TITLE: 3/8" SUBPLATE,DBL SOL, 2 POS, SPR FLOAT CTR, ISO 4400, PUSH OVRD, EXCLDR, SPL OVRD

DRAWING NO.: DIM_SY3PGEDOPLOS

THE INFORMATION CONTAINED WITHIN THIS DOCUMENT IS PROPRIETARY TO AAA PRODUCTS AND MAY NOT BE DISCLOSED WITHOUT PRIOR WRITTEN CONSENT