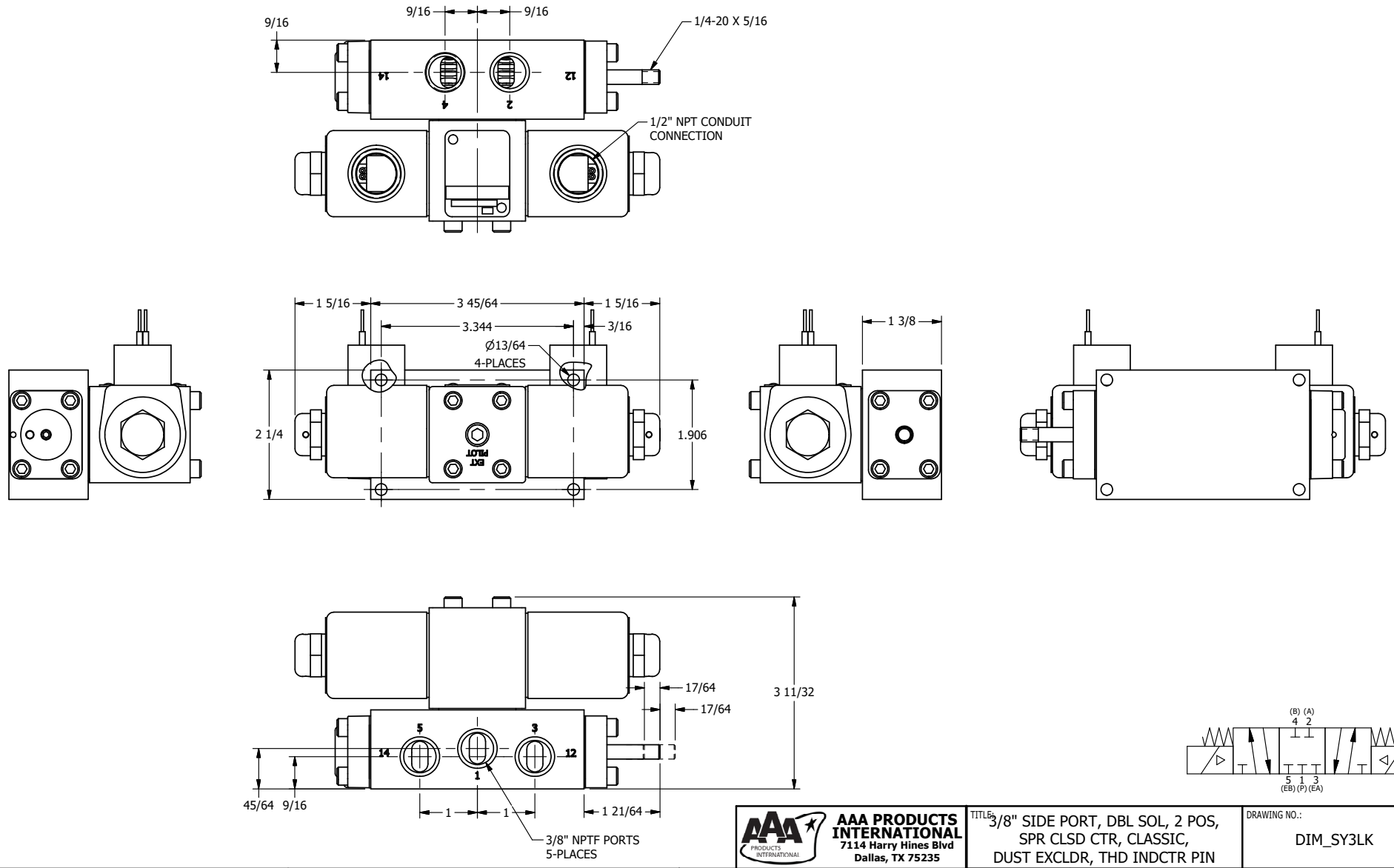

AAA PRODUCTS INTERNATIONAL
7114 Harry Hines Blvd
Dallas, TX 75235

TITLE: 3/8" SIDE PORT, DBL SOL, 2 POS, SPR CLSD CTR, CLASSIC, DUST EXCLDR, THD INDCTR PIN

DRAWING NO.: DIM_SY3LK

THE INFORMATION CONTAINED WITHIN THIS DOCUMENT IS PROPRIETARY TO AAA PRODUCTS AND MAY NOT BE DISCLOSED WITHOUT PRIOR WRITTEN CONSENT