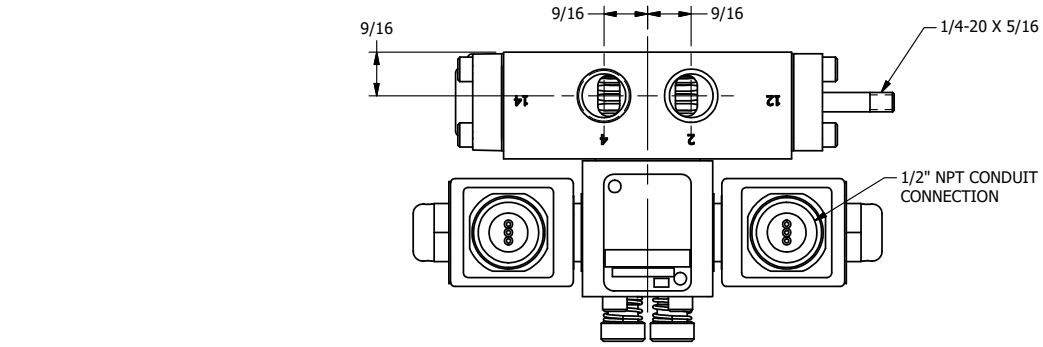

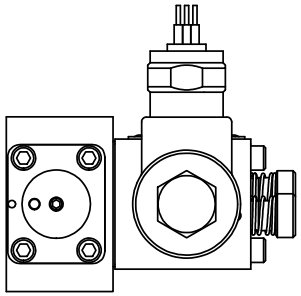

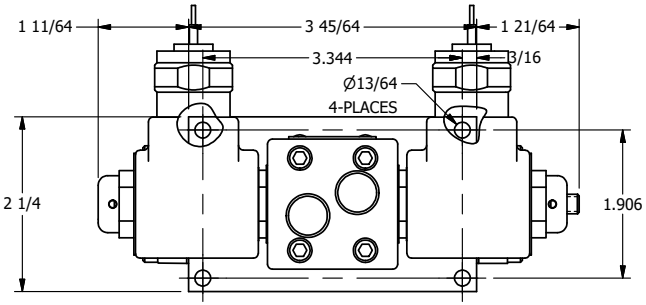

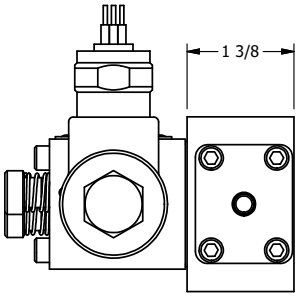

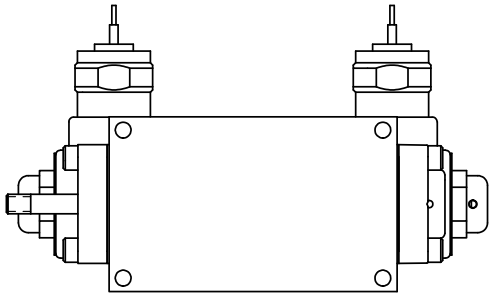

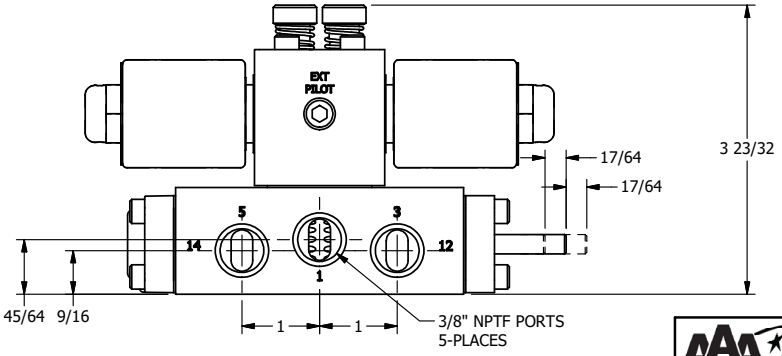

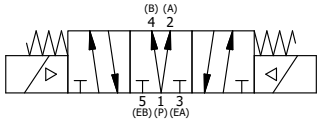

AAA PRODUCTS INTERNATIONAL 7114 Harry Hines Blvd Dallas, TX 75235	TITLE: 3/8" SIDE PORT, DBL SOL, 2 POS, SPR REGEN CTR, MOLD-OVER, LCKNG OVRD, DUST EXCLDR, THRD PIN	DRAWING NO.: DIM_SY3DMOLK

THE INFORMATION CONTAINED WITHIN THIS DOCUMENT IS PROPRIETARY TO AAA PRODUCTS AND MAY NOT BE DISCLOSED WITHOUT PRIOR WRITTEN CONSENT