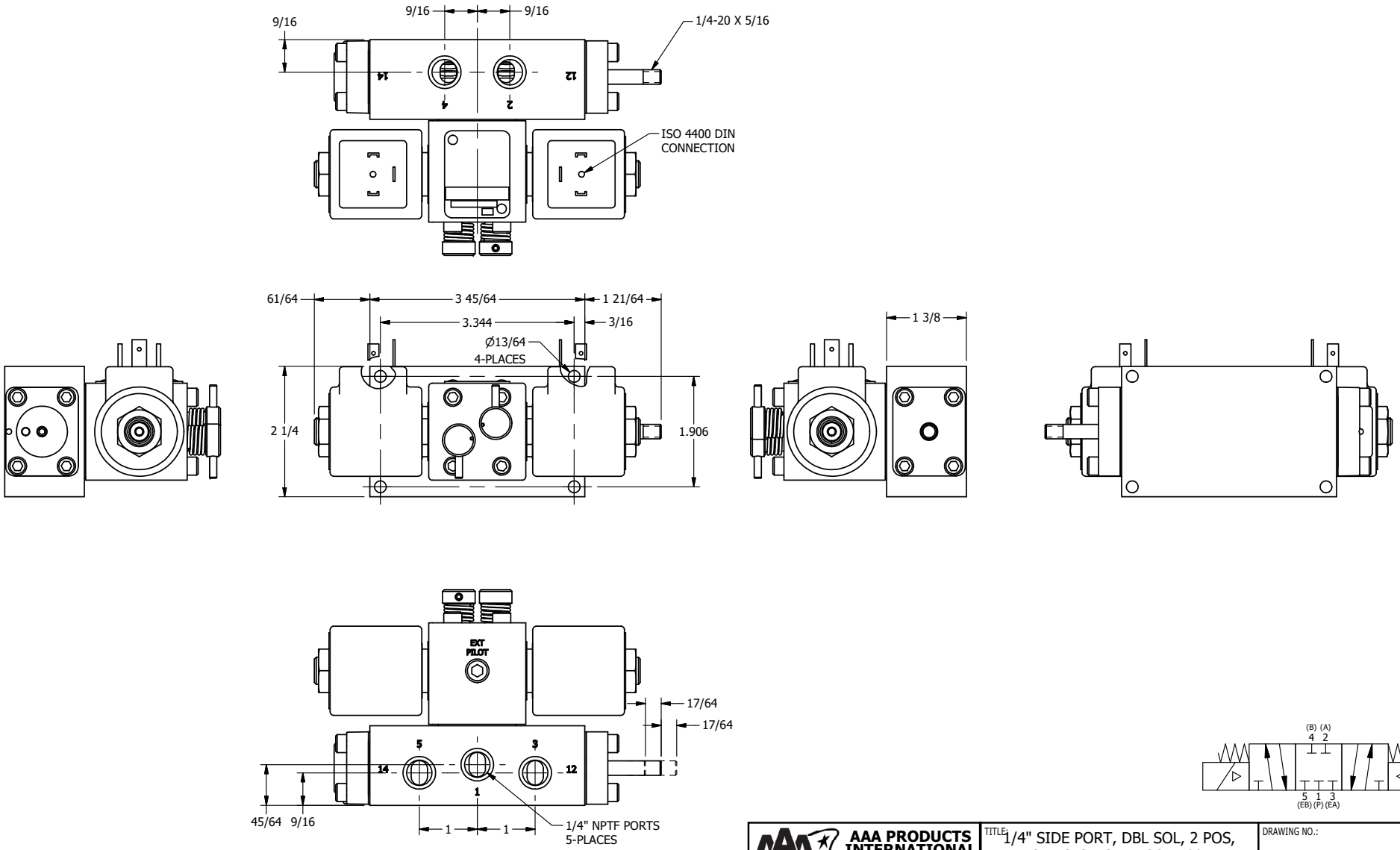

AAA PRODUCTS INTERNATIONAL
7114 Harry Hines Blvd
Dallas, TX 75235

TITLE: 1/4" SIDE PORT, DBL SOL, 2 POS, SPR CLSD CTR, ISO 4400, NON-LCKNG OVRD, EXCLDR, SPL OVRD

DRAWING NO.: DIM_SY2EDONTK

THE INFORMATION CONTAINED WITHIN THIS DOCUMENT IS PROPRIETARY TO AAA PRODUCTS AND MAY NOT BE DISCLOSED WITHOUT PRIOR WRITTEN CONSENT