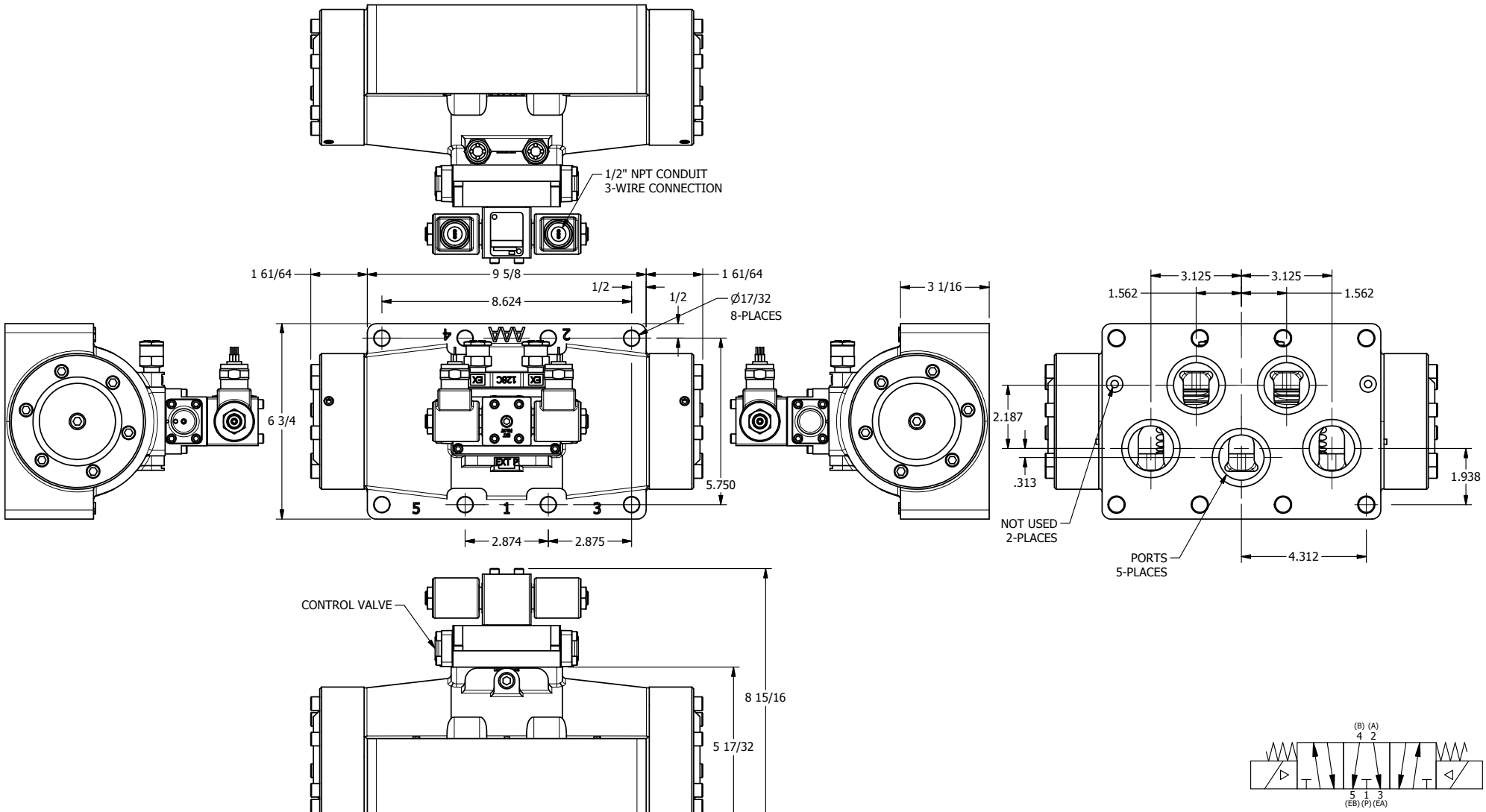

AAA PRODUCTS INTERNATIONAL
7114 Harry Hines Blvd
Dallas, TX 75235

TITLE: 2" SUBPLATE, DBL SOL, 3 POS, SPR CTR, SOL RTRN, FLOAT CTR SPL, MOLD-OVER

PART NO.: DIM_SY16PGM

THE INFORMATION CONTAINED WITHIN THIS DOCUMENT IS PROPRIETARY TO AAA PRODUCTS AND MAY NOT BE DISCLOSED WITHOUT PRIOR WRITTEN CONSENT