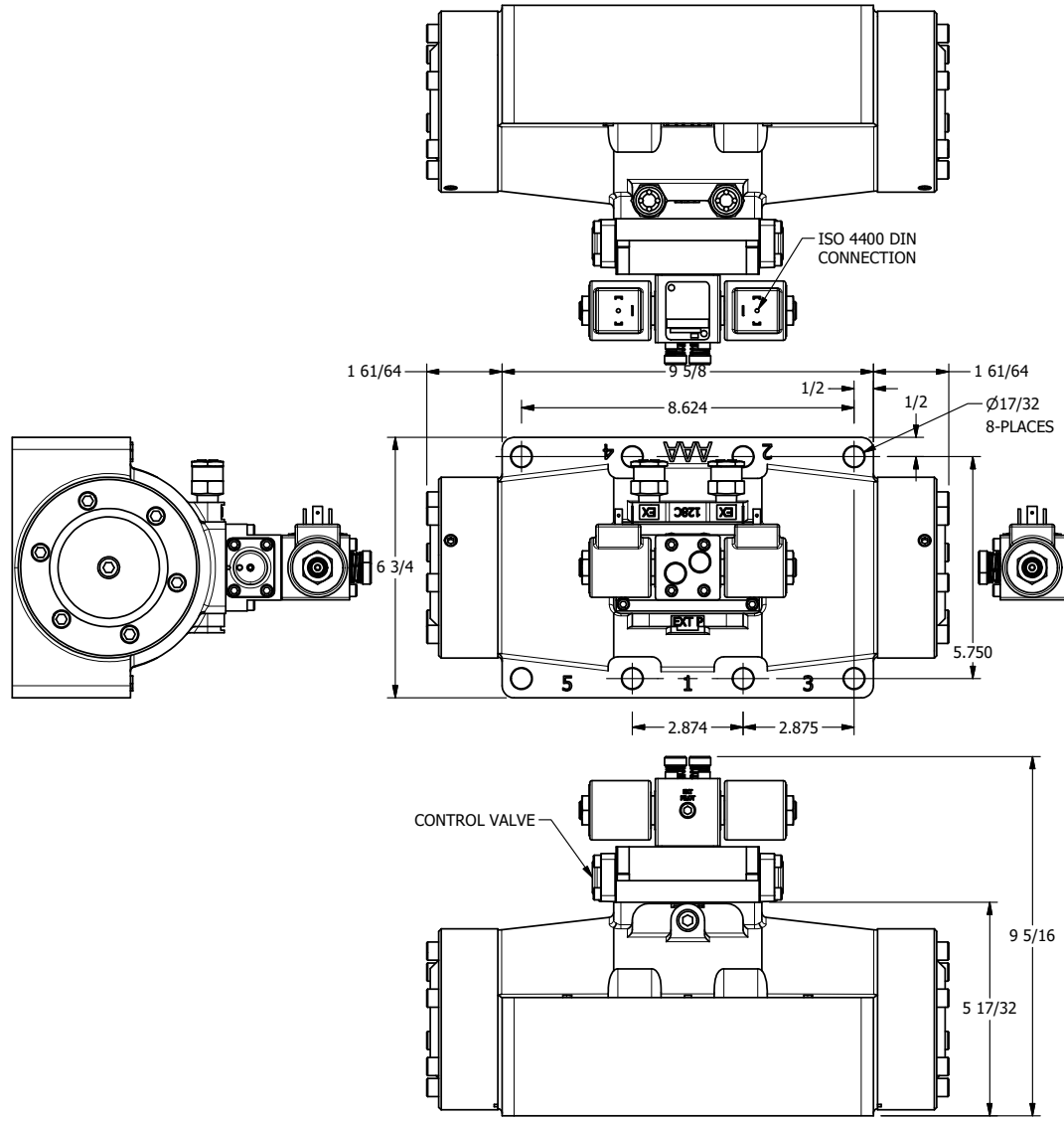

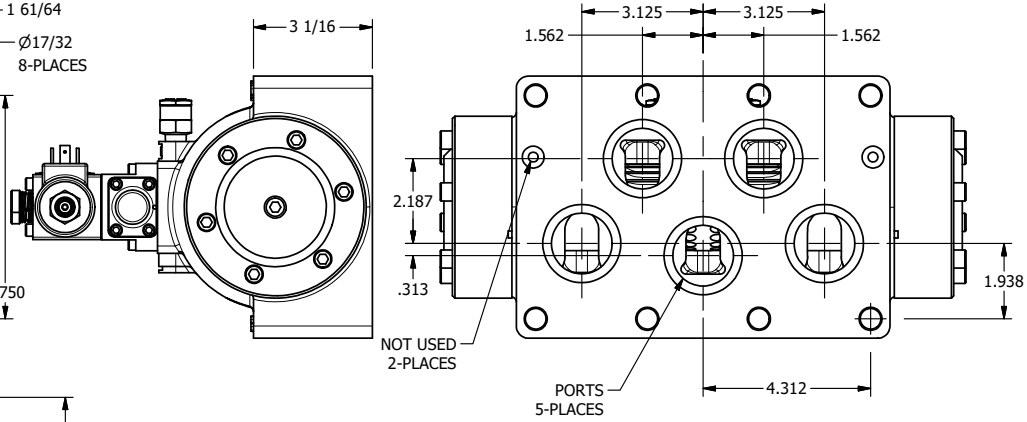

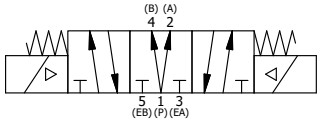

AAA PRODUCTS INTERNATIONAL
7114 Harry Hines Blvd
Dallas, TX 75235

TITLE: 2" SUBPLATE, DBL SOL, 3 POS, SPR REGEN CTR, ISO 4400, PUSH OVRD, TAPPED VENT

DRAWING NO.: DIM_SY16PDEDOPT

THE INFORMATION CONTAINED WITHIN THIS DOCUMENT IS PROPRIETARY TO AAA PRODUCTS AND MAY NOT BE DISCLOSED WITHOUT PRIOR WRITTEN CONSENT