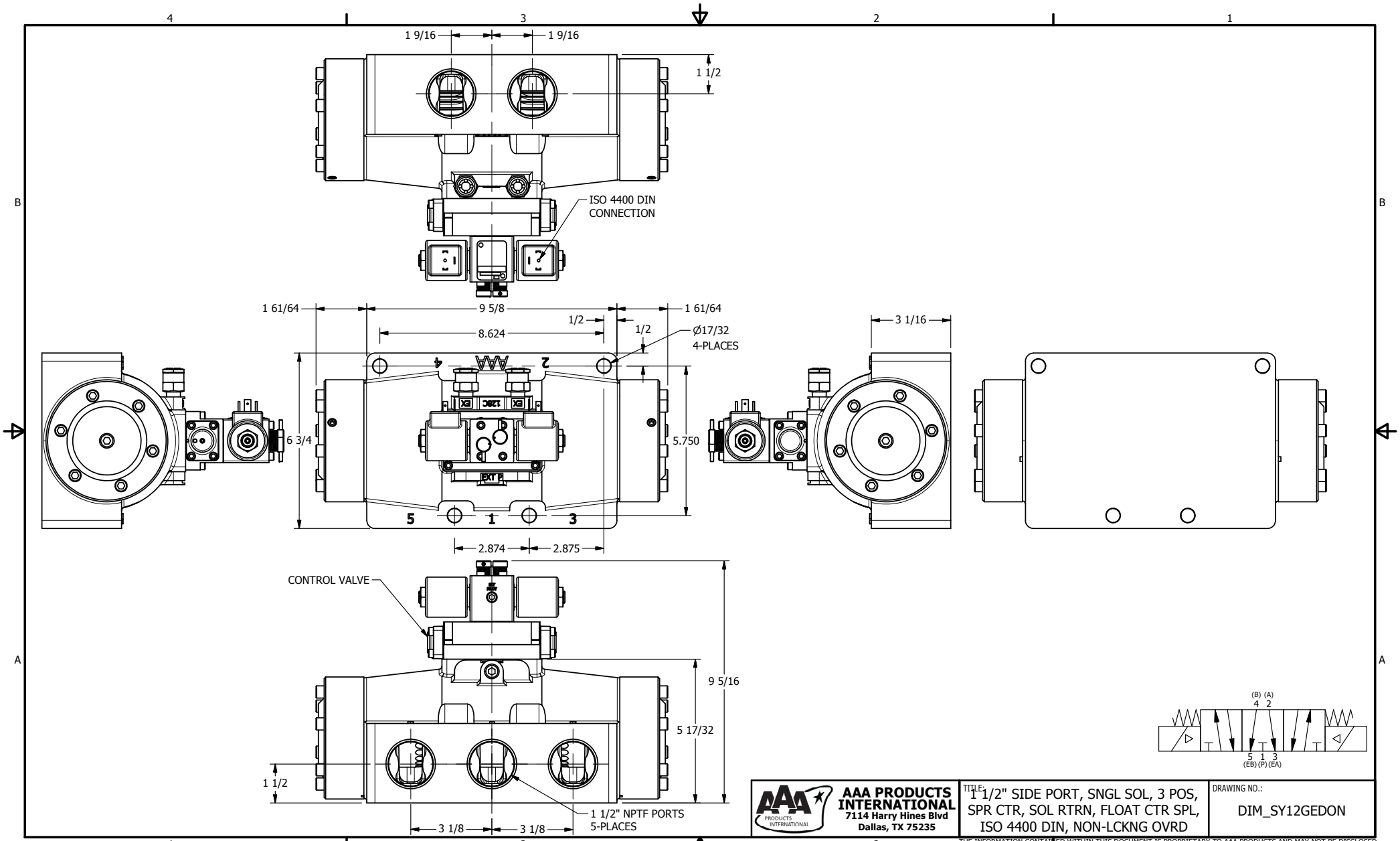

AAA PRODUCTS INTERNATIONAL
7114 Harry Hines Blvd
Dallas, TX 75235

TITLE: 1 1/2" SIDE PORT, SNGL SOL, 3 POS, SPR CTR, SOL RTRN, FLOAT CTR SPL, ISO 4400 DIN, NON-LCKNG OVRD

DRAWING NO.: DIM_SY12GEDON

THE INFORMATION CONTAINED WITHIN THIS DOCUMENT IS PROPRIETARY TO AAA PRODUCTS AND MAY NOT BE DISCLOSED WITHOUT PRIOR WRITTEN CONSENT