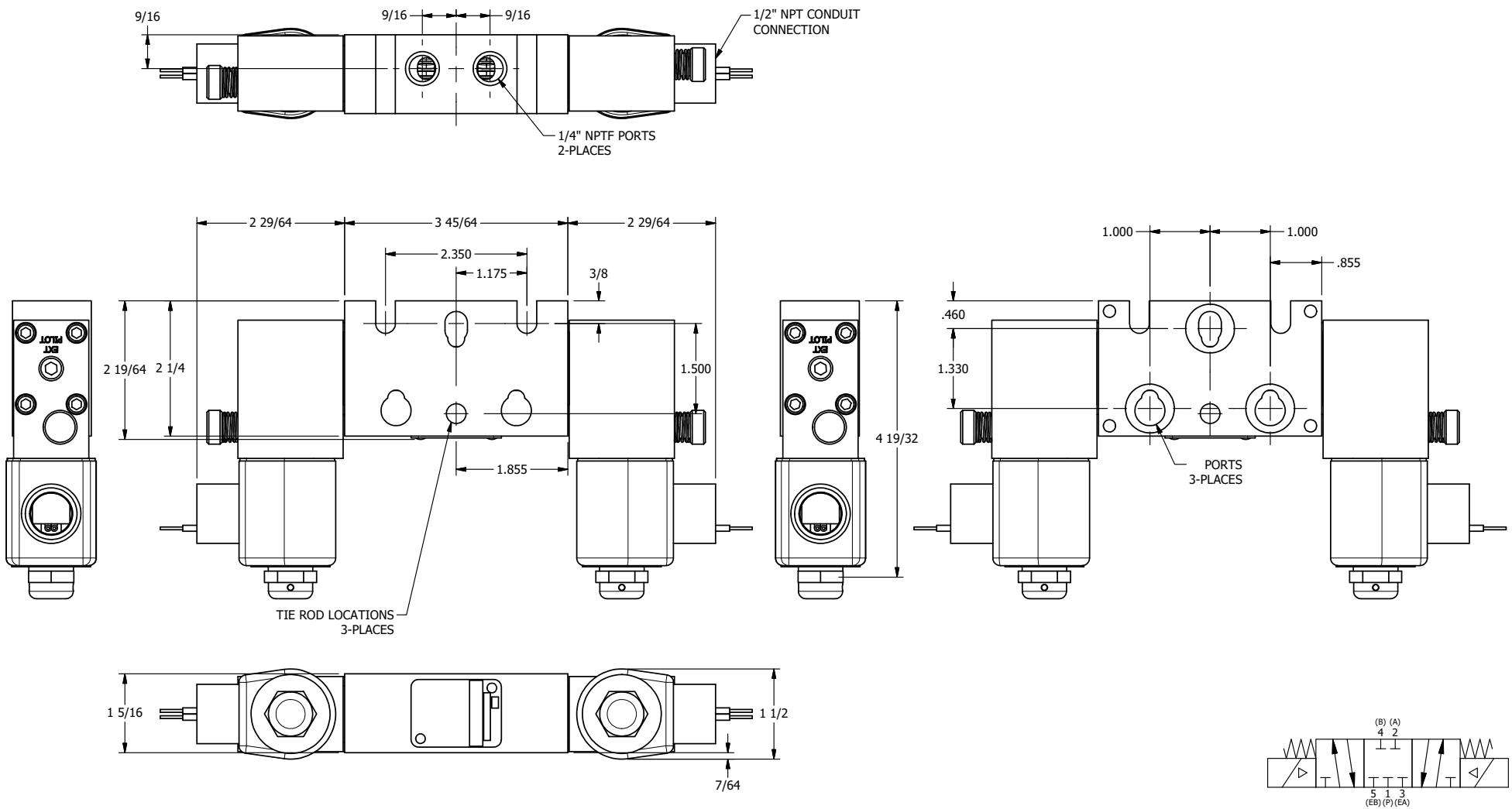

AAA PRODUCTS INTERNATIONAL 7114 Harry Hines Blvd Dallas, TX 75235	TITLE: 1/4" STACK, DBL SOL, 3 POS, SPR CLSD CTR, CLASSIC, PUSH OVRD, DUST EXCLDR	DRAWING NO.: DIM_BSY2OPL

THE INFORMATION CONTAINED WITHIN THIS DOCUMENT IS PROPRIETARY TO AAA PRODUCTS AND MAY NOT BE DISCLOSED WITHOUT PRIOR WRITTEN CONSENT