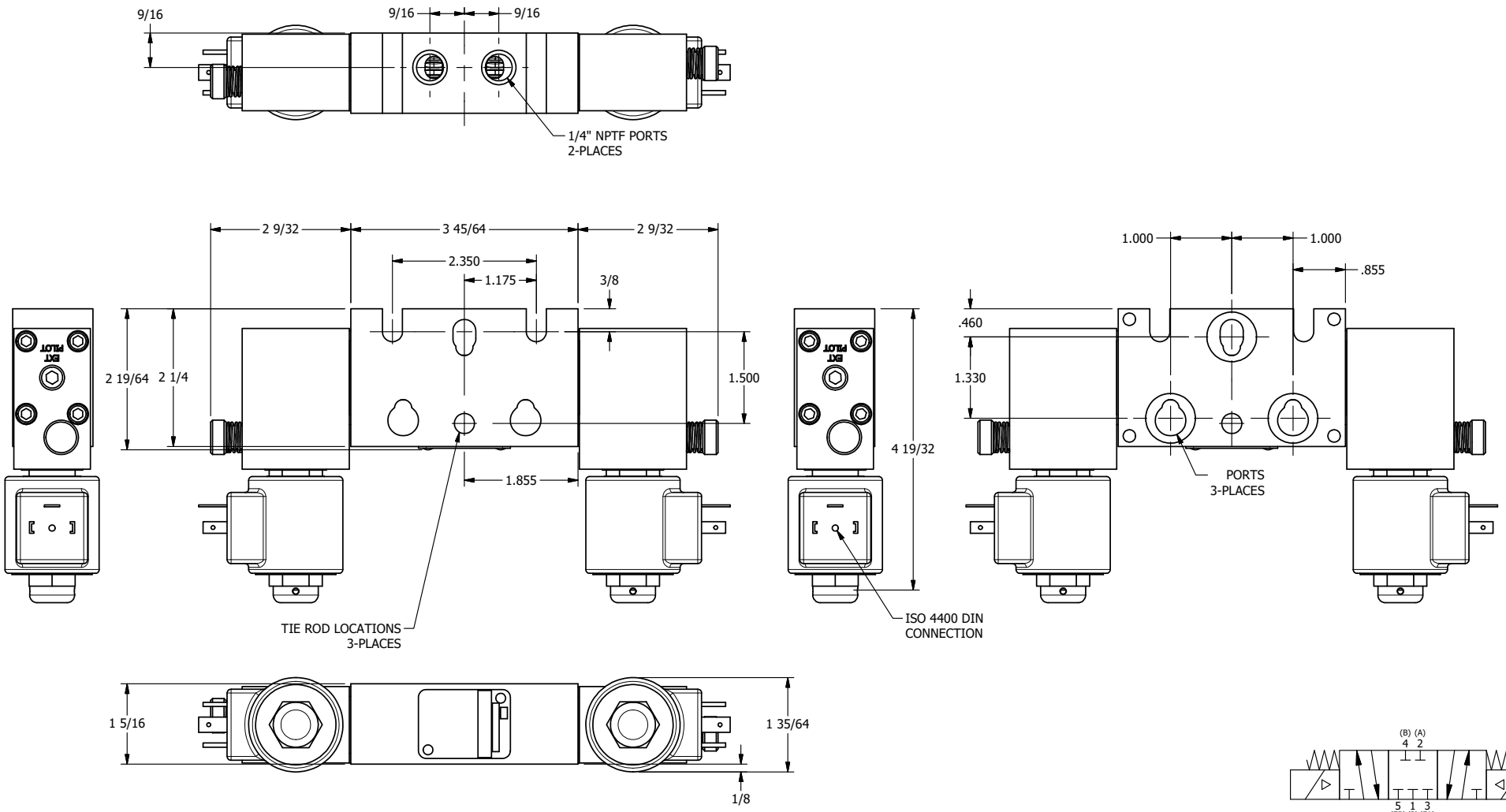

AAA PRODUCTS INTERNATIONAL
7114 Harry Hines Blvd
Dallas, TX 75235

TITLE: 1/4" STACK, DBL SOL, 3 POS, SPR CLSD CTR, ISO 4400, PUSH OVRD, DUST EXCLDR

DRAWING NO.: DIM_BSY2EDOPL

THE INFORMATION CONTAINED WITHIN THIS DOCUMENT IS PROPRIETARY TO AAA PRODUCTS AND MAY NOT BE DISCLOSED WITHOUT PRIOR WRITTEN CONSENT