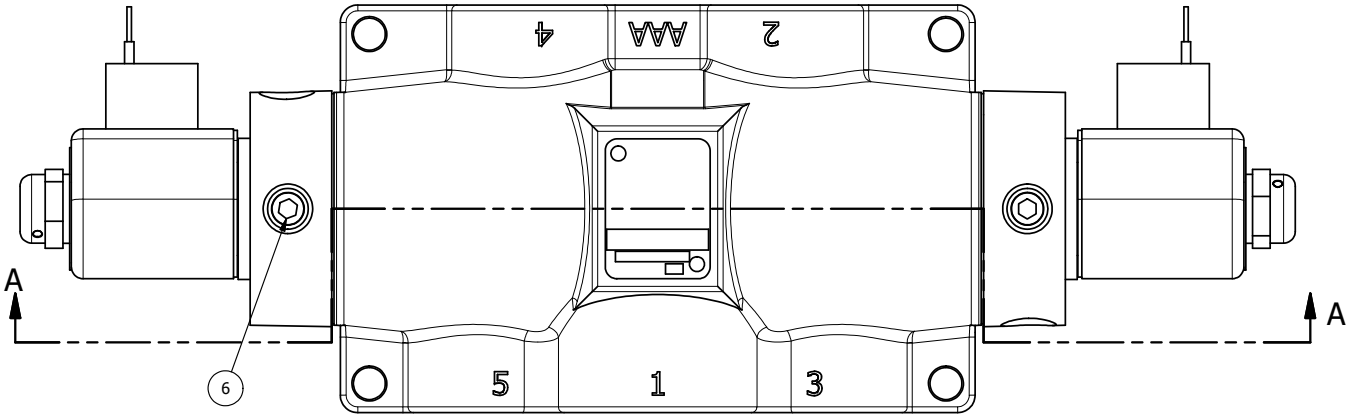

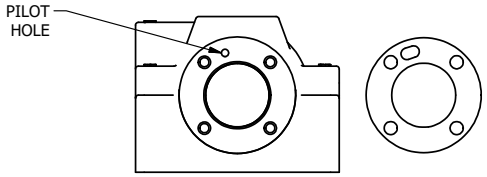

ALIGN PILOT AND HOLE IN GASKET, BOTH SIDES.
FOR EXTERNAL PILOT OPERATION - ROTATE THE ROUND ALUMINUM ADAPTOR 90 OR 180 DEGREES.
REMOVE 1/8" NPTF PLUG AND SUPPLY 50-160 PSI TO 1/8" NPTF PILOT PORT IN ADAPTOR.

NOTES:
1) ALWAYS GIVE VALVE MODEL AND PART NUMBER WHEN ORDERING PARTS.
2) FOR DIFFERENT VOLTAGES OTHER THAN 120/60, REPLACE SOLENOID OPERATOR WITH OPERATOR LISTED IN TABLE BELOW. REFERENCE AY-38L DRAWING FOR REPLACEMENT COILS.

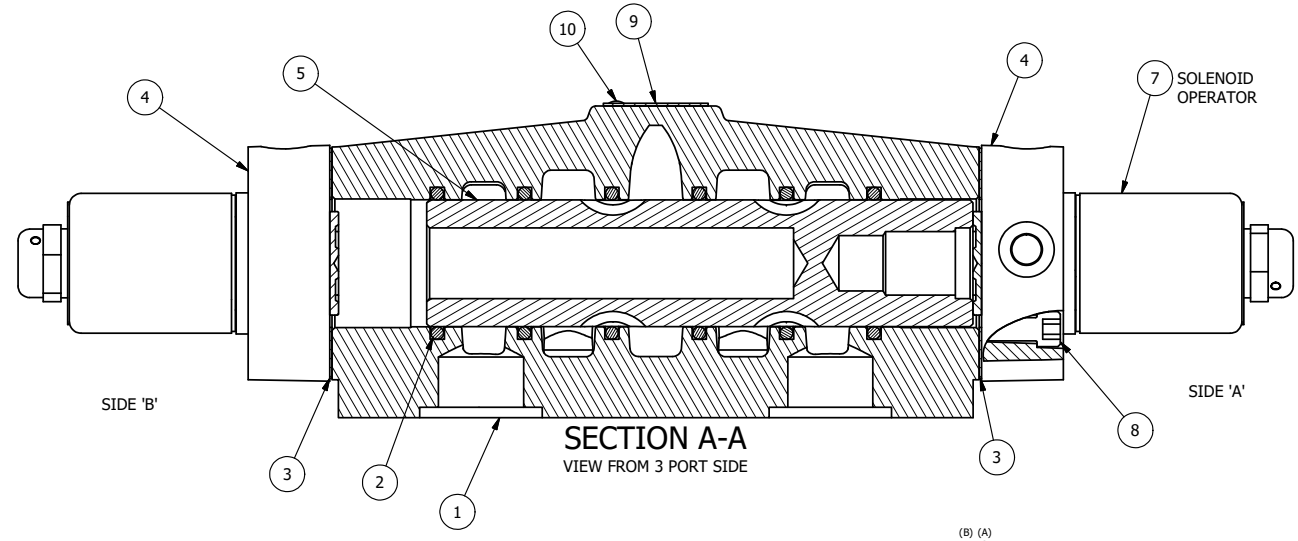

SECTION A-A
VIEW FROM 3 PORT SIDE

FLG	QTY	PART NO	DESCRIPTION
11	1	SPK-8	KIT - SUBPLATE MOUNT, 1" SUBPLATE VALVES
10	2	V-212	SCREW, #2 X 3/16 DRIVE, TYPE U, OVAL HEAD, STAINLESS STEEL
9	1	AN-115	NAMEPLATE, BLANK, FOR HE,KE,KD,RR,D,CR,PP,SR,SS VALVES
8	8	V-47	SCREW, 1/4-20 X 1, SOCKET HEAD CAP
7	2	AY-38L-11	CLASSIC SOLENOID, 120/60, W/DUST EXCLUDER
6	2	V-19	PLUG, SOCKET PIPE 1/8" NPT (#601-3 PITTSBURG PLUG PART #.)
5	1	S8	SPOOL - STANDARD, 2 POS, CLSD CTR, 3/4" & 1" VALVE
4	2	SSA48	ADAPTOR, SOLENOID, 1/2", 3/4" & 1" VALVE
3	2	ECG48	GASKET - END CAP, 1/2", 3/4" & 1" VALVE
2	6	V-30	O-RING, BUNA-N, 70 DURO, AS-220, (REF 1-3/8 X 1-5/8 X 1/8), 3/4" & 1" VALVES
1	1	BP8-1	BODY, 1" SUBPLATE, UPPER PILOTS, ANODIZED

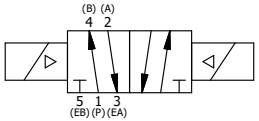

OPERATOR VOLTAGES	
PART NO	REPLACE OPERATOR
SS8PL 240/60	AY-38L-17
SS8PL 24VDC	AY-38L-8
SS8PL 12VDC	AY-38L-5

LIMITS ON DIMENSIONS UNLESS OTHERWISE SPECIFIED
2-PL DECIMAL ± .01
3-PL DECIMAL ± .005
FRACTIONAL ± 1/64
ANGULAR ± 1/2'

AAA PRODUCTS INTERNATIONAL
7114 Harry Hines Blvd
Dallas, TX 75235

DRAWN: RMcKenna DATE: 7/29/2015
CHECKED: KWaite DATE: 7/29/2015
SCALE: 1 : 1 SHEET: 1 OF 1
RELEASED: HWomack DATE: 7/29/2015

TITLE: 1" SUBPLATE, DBL SOL, 2 POS., FRICTION POS, SOL RTRN, CLASSIC SOL, 120/60, DUST EXLDR

PART NO.: SS8PL

REV.:

THE INFORMATION CONTAINED WITHIN THIS DOCUMENT IS PROPRIETARY TO AAA PRODUCTS AND MAY NOT BE DISCLOSED WITHOUT PRIOR WRITTEN CONSENT

D:\Engineering\Product\Valve\Assembly\Classic\SS\SV6\SS8PL.dw