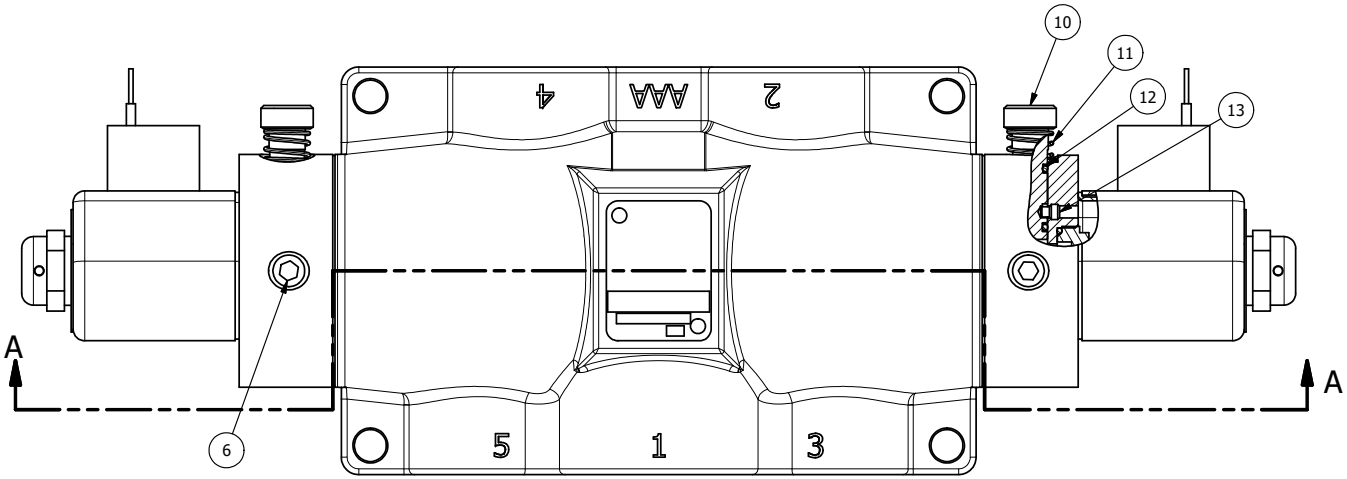

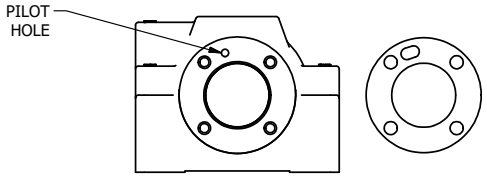

ALIGN PILOT AND HOLE IN GASKET, BOTH SIDES.
FOR EXTERNAL PILOT OPERATION - ROTATE THE
ROUND ALUMINUM ADAPTOR 90 OR 180 DEGREES.
REMOVE 1/8" NPTF PLUG AND SUPPLY 50-160 PSI TO
1/8" NPTF PILOT PORT IN ADAPTOR.

NOTES:
1) ALWAYS GIVE VALVE MODEL AND PART NUMBER WHEN ORDERING PARTS.
2) FOR DIFFERENT VOLTAGES OTHER THAN 120/60, REPLACE SOLENOID OPERATOR WITH OPERATOR LISTED IN TABLE BELOW. REFERENCE AY-38L DRAWING FOR REPLACEMENT COILS.

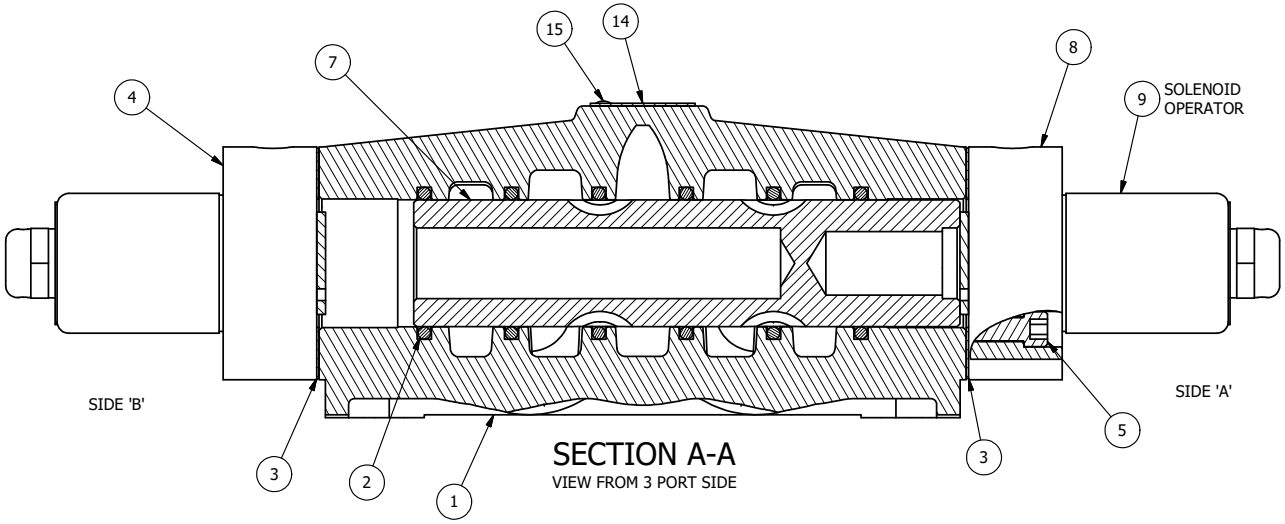

SECTION A-A
VIEW FROM 3 PORT SIDE

FLG	QTY	PART NO	DESCRIPTION
15	2	V-212	SCREW, #2 X 3/16 DRIVE, TYPE U, OVAL HEAD, STAINLESS STEEL
14	1	AN-115	NAMEPLATE, BLANK, FOR HE,KE,RR,D,CR,PP,SR,SS VALVES
13	2	V-81	SCREW, 8-32 X 5/16, SOCKET SET, FULL DOG POINT
12	4	V-85	O-RING, BUNA-N, 70 DURO, AS-010, (REF 1/4 X 3/8 X 1/16), CLASSIC OVRD
11	2	OS3	SPRING - MANUAL OVERRIDE, "CLASSIC" SOLENOID
10	2	OP4	PIN , MANUAL OVERRIDE, 1/2", 3/4" & 1" VALVES
9	2	AY-38L-11	CLASSIC SOLENOID, 120/60, W/DUST EXCLUDER
8	1	SSA48-O	ADAPTOR, 'A' SIDE, CLASSIC SOL., OVERRIDE, SOLID, 1/2", 3/4" & 1" VALVE
7	1	S8	SPOOL - STANDARD, 2 POS, CLSD CTR, 3/4" & 1" VALVE
6	2	V-19	PLUG, 1/8-27 NPT, 7/8 TAPER, FLUSH SEAL, SOCKET PIPE PLUG W/LOCTITE RED VIBRA-SEAL
5	8	V-47	SCREW, 1/4-20 X 1, SOCKET HEAD CAP
4	1	SSA48-OS	ADAPTOR, 'B' SIDE, CLASSIC SOL., OVERRIDE, SOLID, 1/2", 3/4" & 1" VALVE
3	2	ECG48	GASKET - END CAP, 1/2", 3/4" & 1" VALVE
2	6	V-30	O-RING, BUNA-N, 70 DURO, AS-220, (REF 1-3/8 X 1-5/8 X 1/8), 3/4" & 1" VALVES
1	1	B6-1	BODY, 3/4" SIDE PORT, UPPER PILOTS, ANODIZED

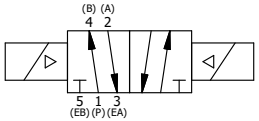

OPERATOR VOLTAGES	
PART NO	REPLACE OPERATOR
SS6OL 12VDC	AY-38L-5
SS6OL 24VDC	AY-38L-8
SS6OL 240/60	AY-38L-17

LIMITS ON DIMENSIONS UNLESS OTHERWISE SPECIFIED
2-PL DECIMAL ± .01
3-PL DECIMAL ± .005
FRACTIONAL ± 1/64
ANGULAR ± 1/2'

AAA PRODUCTS INTERNATIONAL
7114 Harry Hines Blvd
Dallas, TX 75235

DRAWN: RMcKenna DATE: 11/14/2015
CHECKED: KWaite DATE: 11/14/2015
SCALE: 1 : 1 SHEET: 1 OF 1
RELEASED: HWomack DATE: 11/14/2015

TITLE: 3/4" SIDE PORT, DBL SOL, 2 POS, FRICTION POS, CLASSIC SOL,120/60, LCKNG OVRD, DUST EXCLDR

PART NO.: SS6OL

REV.:

THE INFORMATION CONTAINED WITHIN THIS DOCUMENT IS PROPRIETARY TO AAA PRODUCTS AND MAY NOT BE DISCLOSED WITHOUT PRIOR WRITTEN CONSENT

D:\Engineering\Product\Valves\Assembly\classic\SS6\VG\SS6OL.dw