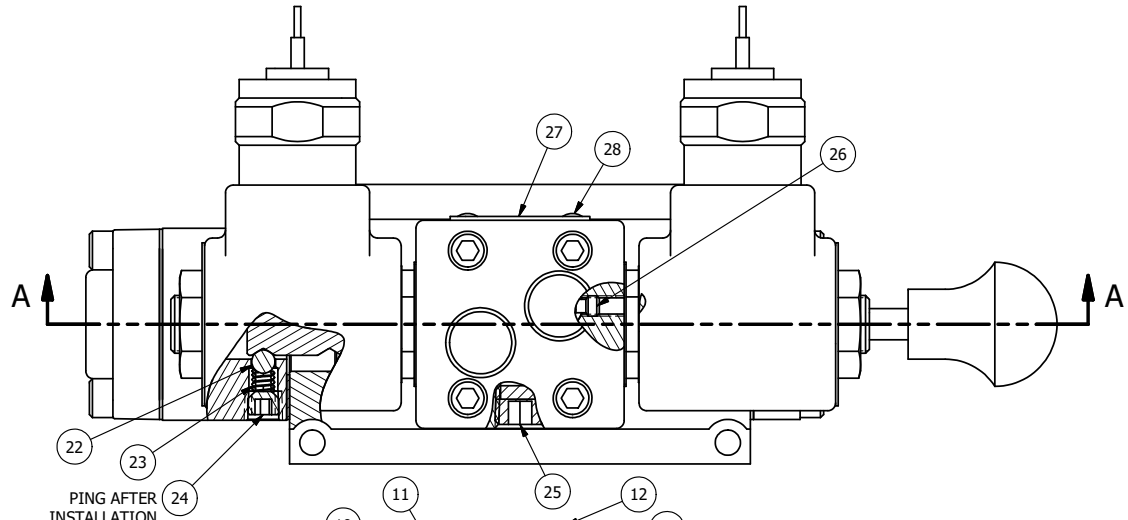

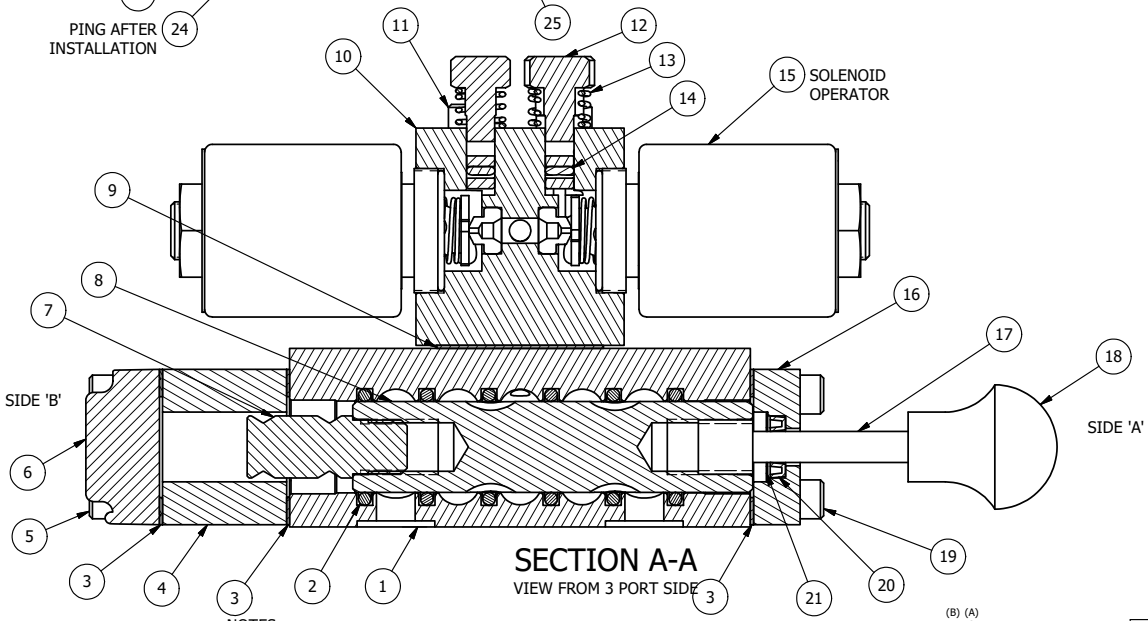

SECTION A-A

VIEW FROM 3 PORT SIDE

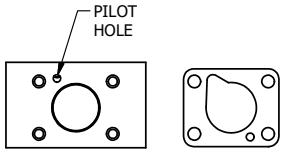

ALIGN PILOT HOLE AND CENTER CUTOUT ON BOTH SIDES.

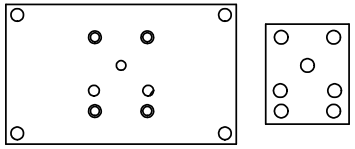

ALIGN HOLES IN GASKET AS SHOWN.
(FOR EXTERNAL PILOT PRESSURE, REMOVE PIGGY BACK BLOCK AND ROTATE 180°. LEAVE GASKET AS SHOWN. REMOVE 1/8" PLUG AND CONNECT SUPPLY PRESSURE - 160 PSI MAX.)

FLG	QTY	PART NO	DESCRIPTION
29	1	SPK-3	KIT - SUBPLATE MOUNTING, 3/8" SUBPLATE VALVES
28	2	V-212	SCREW, #2 X 3/16 DRIVE, TYPE U, OVAL HEAD, STAINLESS STEEL
27	1	AN-115	NAMEPLATE, BLANK, FOR HE,KE,RR,D,CR,PP,SR,SS VALVES
26	2	V-81	SCREW, 8-32 X 5/16, SOCKET SET, FULL DOG POINT
25	1	V-19	PLUG, 1/8-27 NPT, 7/8 TAPER, FLUSH SEAL, SOCKET PIPE PLUG W/LOCTITE RED VIBRA-SEAL
24	1	V-21	SCREW, 1/4-20 X 3/16, SOCKET SET, CUP POINT
23	1	DS3	SPRING - DETENT, 1/4" & 3/8" VALVE
22	1	V-14	BALL, CHROME STEEL 3/16 DIA, GRADE 25, FOR DETENT
21	1	V-119	RING,CIRCULAR PUSH ON TYPE FOR INDICATOR PIN
20	1	V-78	U-CUP, 1/2 X 1/4 X 1/8, NITRILE
19	4	V-38	SCREW, 10-24 X 3/4, SOCKET HEAD CAP
18	1	V-570	KNOB,BLACK (BRASS 1/4-20 INSERT), OS OPTION
17	1	PIK3	PIN, SPOOL OVERRIDE, 303 STAINLESS, 1/4" & 3/8" VALVES
16	1	PEC3-5	END CAP, INDICATOR PIN, WIPER CAVITY, 6061-T6, 1/4" & 3/8" VALVE
15	2	AY-38MT-11	CLASSIC SOLENOID - 1/2" NPT CONDUIT, 120/60, TAPPED EXH
14	2	V-85	O-RING, BUNA-N, 70 DURO, AS-010, (REF 1/4 X 3/8 X 1/16), CLASSIC OVRD
13	2	OS3	SPRING - MANUAL OVERRIDE, "CLASSIC" SOLENOID
12	2	OP3	PIN - MANUAL OVERRIDE, 1/4" & 3/8" VALVES
11	4	V-1	SCREW, 10-24 X 2, SOCKET HEAD CAP
10	1	PB3-4E	ADAPTOR - DBL SOL., W/OVERRIDE, 1/4" & 3/8" VALVES
9	1	PBG3	GASKET - PIGGY BACK, DOUBLE SOLENOID, 1/4" & 3/8" VALVE
8	1	S3R	SPOOL - SOLID, STANDARD, 2 POS, CLSD CTR, 1/4" & 3/8" VALVE
7	1	PBS3-13	STUD - POS. A & C. DETENT, SOLENOID OPERATOR, STAINLESS, 1/4" & 3/8" VALVE
6	1	SEC3-1	END CAP, NON-VENTED, 380 AL, 1/4" & 3/8" VALVES
5	4	V-614	SCREW, 10-24 X 1-3/4", SOCKET HEAD CAP
4	1	PEC3-18	ENDCAP, SPACER, DETENT, SOLENOID, 6061-T6, 1/4" & 3/8" VALVES
3	3	ECG3	GASKET - END CAP, 1/4" & 3/8" VALVE
2	6	V-39	O-RING, VITON, STD BODY, 1/4" & 3/8" VALVES
1	1	BP3-6E	BODY - SOLID, PIGGY BACK, ANODIZED, 3/8" SUBPLATE VALVE

NOTES:
1) ALWAYS GIVE VALVE MODEL AND PART NUMBER WHEN ORDERING PARTS.
2) FOR DIFFERENT VOLTAGES OTHER THAN 120/60, REPLACE SOLENOID OPERATOR WITH OPERATOR LISTED IN TABLE BELOW. REFERENCE AY-38MT DRAWING FOR REPLACEMENT COILS.
3) LUBRICATE DETENT BALL, SPRING AND STUD.

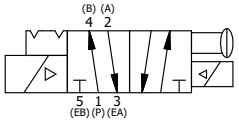

OPERATOR VOLTAGES	
PART NO	REPLACE OPERATOR
SS3PMOTOSQ 12VDC	AY-38MT-5
SS3PMOTOSQ 24VDC	AY-38MT-8
SS3PMOTOSQ 240/60	AY-38MT-17

LIMITS ON DIMENSIONS UNLESS OTHERWISE SPECIFIED
2-PL DECIMAL ± .01
3-PL DECIMAL ± .005
FRACTIONAL ± 1/64
ANGULAR ± 1/2'

AAA PRODUCTS INTERNATIONAL
7114 Harry Hines Blvd
Dallas, TX 75235

DRAWN: RMcKenna	DATE: 2/27/2025	CHECKED: KWaite	DATE: 2/27/2025
SCALE: 1 : 1	SHEET: 1 OF 1	RELEASED: HWomack	DATE: 2/27/2025

TITLE: 3/8" SUBPLATE, DBL SOL, 2 POS, DTNT, SOL RTRN, MOLD-OVER, 120/60, LCKNG OVRD, TPD VNT, SPL OVRD

PART NO.: SS3PMOTOSQ

REV.:

THE INFORMATION CONTAINED WITHIN THIS DOCUMENT IS PROPRIETARY TO AAA PRODUCTS AND MAY NOT BE DISCLOSED WITHOUT PRIOR WRITTEN CONSENT

D:\Engineering\Product\Valves\Assembly\classic\SS3pVlv\SS3PMOTOSQ.dw