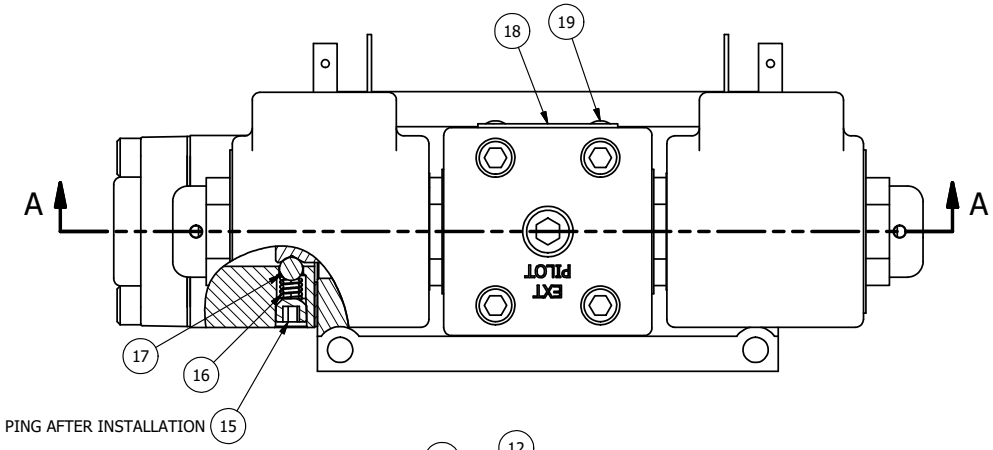

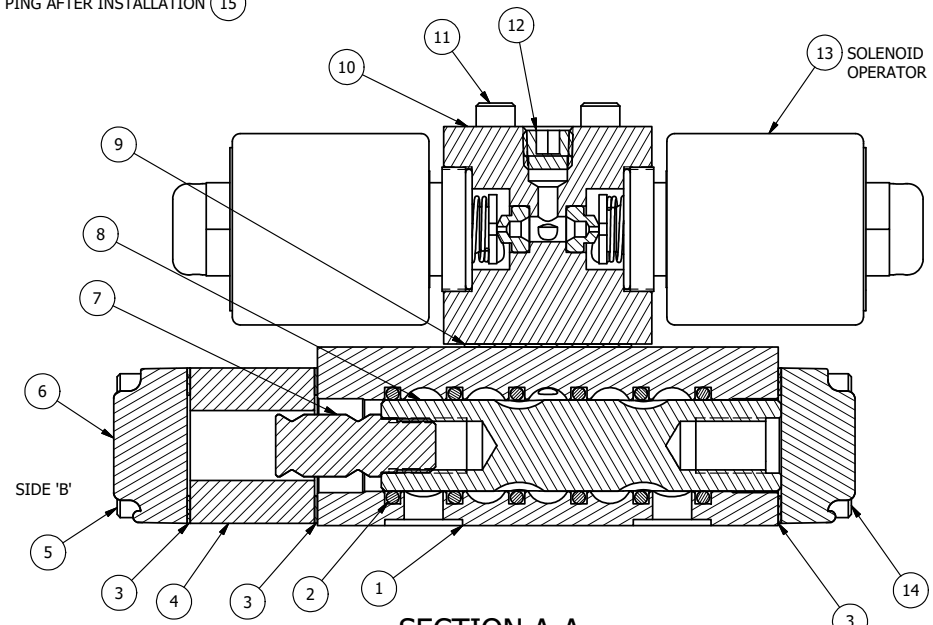

SECTION A-A

VIEW FROM 3 PORT SIDE

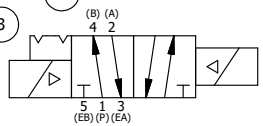

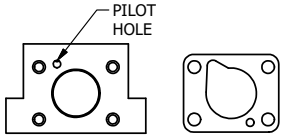

ALIGN PILOT HOLE AND CENTER CUTOUT ON BOTH SIDES (SIDE 'A' SHOWN).

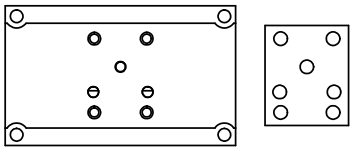

ALIGN HOLES IN GASKET AS SHOWN. (PIGGY BACK BLOCK IS ROTATED 180°. CONNECT SUPPLY PRESSURE - 160 PSI MAX.)

NOTES:
1) ALWAYS GIVE VALVE MODEL AND PART NUMBER WHEN ORDERING PARTS.
2) FOR DIFFERENT VOLTAGES OTHER THAN 120/60, REPLACE SOLENOID OPERATOR WITH OPERATOR LISTED IN TABLE BELOW. REFERENCE AY-38EDL DRAWING FOR REPLACEMENT COILS.
3) LUBRICATE DETENT BALL, SPRING AND STUD.

FLG	QTY	PART NO	DESCRIPTION
20	1	SPK-3	KIT - SUBPLATE MOUNTING, 3/8" SUBPLATE VALVES
19	2	V-212	SCREW, #2 X 3/16 DRIVE, TYPE U, OVAL HEAD, STAINLESS STEEL
18	1	AN-114	NAMEPLATE, BLANK, FOR VALVES WITH SPRINGS OR DETENTS
17	1	V-14	BALL, CHROME STEEL 3/16 DIA, GRADE 25, FOR DETENT
16	1	DS3	SPRING - DETENT, 1/4" & 3/8" VALVE
15	1	V-21	SCREW, 1/4-20 X 3/16, SOCKET SET, CUP POINT
14	4	V-38	SCREW, 10-24 X 3/4, SOCKET HEAD CAP
13	2	AY-38EDL-11	CLASSIC SOLENOID - ISO 4400 DIN, DUST EXCLUDER NUT, 120/60
12	1	V-19	PLUG, 1/8-27 NPT, 7/8 TAPER, FLUSH SEAL, SOCKET PIPE PLUG W/LOCTITE RED VIBRA-SEAL
11	4	V-1	SCREW, 10-24 X 2, SOCKET HEAD CAP
10	1	PB3-2E	ADAPTOR - DOUBLE SOLENOID, 1/4" & 3/8" VALVES
9	1	PBG3	GASKET - PIGGY BACK, DOUBLE SOLENOID, 1/4" & 3/8" VALVE
8	1	S3R	SPOOL - SOLID, STANDARD, 2 POS, CLSD CTR, 1/4" & 3/8" VALVE
7	1	PBS3-13	STUD - POS. A & C. DETENT, SOLENOID OPERATOR, STAINLESS, 1/4" & 3/8" VALVE
6	2	SEC3-1	END CAP, NON-VENTED, 380 AL, 1/4" & 3/8" VALVES
5	4	V-614	SCREW, 10-24 X 1-3/4", SOCKET HEAD CAP
4	1	PEC3-18	ENDCAP, SPACER, DETENT, SOLENOID, 6061-T6, 1/4" & 3/8" VALVES
3	3	ECG3	GASKET - END CAP, 1/4" & 3/8" VALVE
2	6	V-39	O-RING, VITON, STD BODY, 1/4" & 3/8" VALVES
1	1	BP3-6E	BODY - SOLID, PIGGY BACK, ANODIZED, 3/8" SUBPLATE VALVE

OPERATOR VOLTAGES	
PART NO	REPLACE OPERATOR
SS3PEDLQ 12VDC	AY-38EDL-5
SS3PEDLQ 24VDC	AY-38EDL-8
SS3PEDLQ 240/60	AY-38EDL-17

LIMITS ON DIMENSIONS UNLESS OTHERWISE SPECIFIED
2-PL DECIMAL ± .01
3-PL DECIMAL ± .005
FRACTIONAL ± 1/64
ANGULAR ± 1/2'

AAA PRODUCTS INTERNATIONAL
7114 Harry Hines Blvd
Dallas, TX 75235

DRAWN: RMcKenna DATE: 2/24/2025
CHECKED: KWaite DATE: 2/24/2025
SCALE: 1 : 1 SHEET: 1 OF 1
RELEASED: HWomack DATE: 2/24/2025

TITLE: 3/8" SUBPLATE, DBL SOL, 2 POS, DTNT, SOL RTRN, ISO 4400, 120/60, DUST EXCLDR

PART NO.: SS3PEDLQ

REV.:

THE INFORMATION CONTAINED WITHIN THIS DOCUMENT IS PROPRIETARY TO AAA PRODUCTS AND MAY NOT BE DISCLOSED WITHOUT PRIOR WRITTEN CONSENT

D:\Engineering\Product\Valves\Assembly\classic\SS3pVlv\SS3PEDLQ.dw