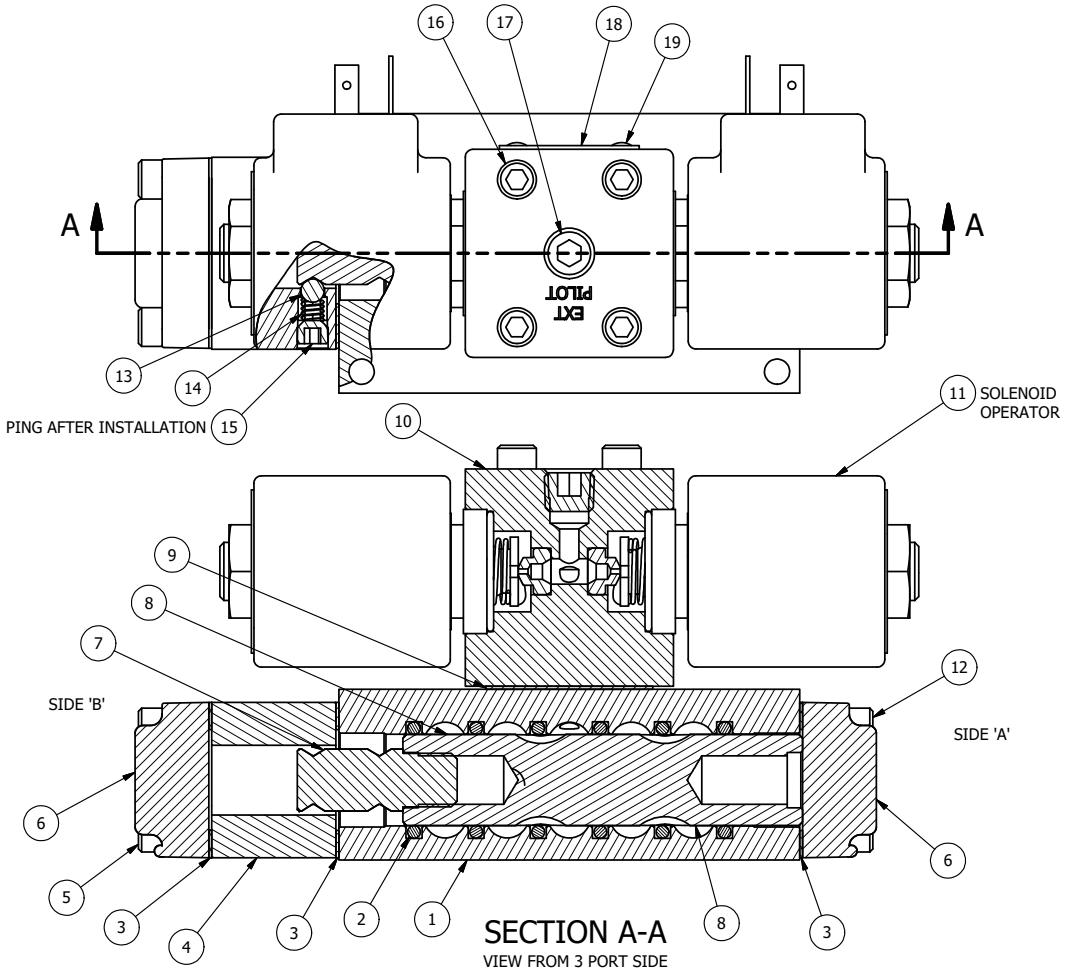


SECTION A-A
VIEW FROM 3 PORT SIDE

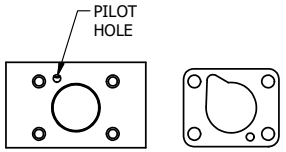


ALIGN PILOT HOLE AND CENTER CUTOUT ON BOTH SIDES.

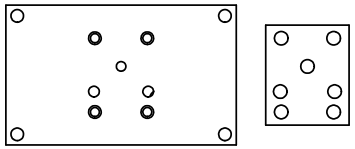

ALIGN HOLES IN GASKET AS SHOWN.
(FOR EXTERNAL PILOT PRESSURE, REMOVE PIGGY BACK BLOCK AND ROTATE 180°. LEAVE GASKET AS SHOWN. REMOVE 1/8" PLUG AND CONNECT SUPPLY PRESSURE - 160 PSI MAX.)

NOTES:
1) ALWAYS GIVE VALVE MODEL AND PART NUMBER WHEN ORDERING PARTS.
2) FOR DIFFERENT VOLTAGES OTHER THAN 120/60, REPLACE SOLENOID OPERATOR WITH OPERATOR LISTED IN TABLE BELOW. REFERENCE AY-38EDT DRAWING FOR REPLACEMENT COILS.
3) LUBRICATE DETENT BALL, SPRING AND STUD.

| FLG | QTY | PART NO | DESCRIPTION |
|---|---|---|---|
| 19 | 2 | V-212 | SCREW, #2 X 3/16 DRIVE, TYPE U, OVAL HEAD, STAINLESS STEEL |
| 18 | 1 | AN-115 | NAMEPLATE, BLANK, FOR HE,KE,RR,D,CR,PP,SR,SS VALVES |
| 17 | 1 | V-19 | PLUG, 1/8-27 NPT, 7/8 TAPER, FLUSH SEAL, SOCKET PIPE PLUG W/LOCTITE RED VIBRA-SEAL |
| 16 | 4 | V-1 | SCREW, 10-24 X 2, SOCKET HEAD CAP |
| 15 | 1 | V-21 | SCREW, 1/4-20 X 3/16, SOCKET SET, CUP POINT |
| 14 | 1 | DS3 | SPRING - DETENT, 1/4" & 3/8" VALVE |
| 13 | 1 | V-14 | BALL, CHROME STEEL 3/16 DIA, GRADE 25, FOR DETENT |
| 12 | 4 | V-38 | SCREW, 10-24 X 3/4, SOCKET HEAD CAP |
| 11 | 2 | AY-38EDT-11 | CLASSIC SOLENOID - ISO 4400 DIN, 1/8" NPTF SOL EXHST, 120/60 |
| 10 | 1 | PB3-2E | ADAPTOR - DOUBLE SOLENOID, 1/4" & 3/8" VALVES |
| 9 | 1 | PBG3 | GASKET - PIGGY BACK, DOUBLE SOLENOID, 1/4" & 3/8" VALVE |
| 8 | 1 | S3R | SPOOL - SOLID, STANDARD, 2 POS, CLSD CTR, 1/4" & 3/8" VALVE |
| 7 | 1 | PBS3-13 | STUD - POS. A & C. DETENT, SOLENOID OPERATOR, STAINLESS, 1/4" & 3/8" VALVE |
| 6 | 2 | SEC3-1 | END CAP, NON-VENTED, 380 AL, 1/4" & 3/8" VALVES |
| 5 | 4 | V-614 | SCREW, 10-24 X 1-3/4", SOCKET HEAD CAP |
| 4 | 1 | PEC3-18 | ENDCAP, SPACER, DETENT, SOLENOID, 6061-T6, 1/4" & 3/8" VALVES |
| 3 | 3 | ECG3 | GASKET - END CAP, 1/4" & 3/8" VALVE |
| 2 | 6 | V-39 | O-RING, VITON, STD BODY, 1/4" & 3/8" VALVES |
| 1 | 1 | B2-6E | BODY - SOLID, PIGGY BACK, ANODIZED, 1/4" SIDE PORT VALVE |

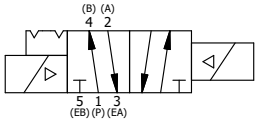


| OPERATOR VOLTAGES | |
|---|---|
| PART NO | REPLACE OPERATOR |
| SS2EDTQ 12VDC | AY-38EDT-5 |
| SS2EDTQ 24VDC | AY-38EDT-8 |
| SS2EDTQ 240/60 | AY-38EDT-17 |

LIMITS ON DIMENSIONS UNLESS OTHERWISE SPECIFIED
2-PL DECIMAL ± .01
3-PL DECIMAL ± .005
FRACTIONAL ± 1/64
ANGULAR ± 1/2'


AAA PRODUCTS INTERNATIONAL
7114 Harry Hines Blvd
Dallas, TX 75235


DRAWN: RMcKenna DATE: 2/17/2025
CHECKED: KWaite DATE: 2/17/2025
SCALE: 1 : 1 SHEET: 1 OF 1
RELEASED: HWomack DATE: 2/17/2025

TITLE: 1/4" SIDE PORT, DBL SOL, 2 POS, DETENT, SOL RTRN, ISO 4400 DIN, TAPPED VENT,120/60

PART NO.: SS2EDTQ

REV.:


THE INFORMATION CONTAINED WITHIN THIS DOCUMENT IS PROPRIETARY TO AAA PRODUCTS AND MAY NOT BE DISCLOSED WITHOUT PRIOR WRITTEN CONSENT


D:\Engineering\Product\Valves\Assembly\classic\SS2EDTQ.dw