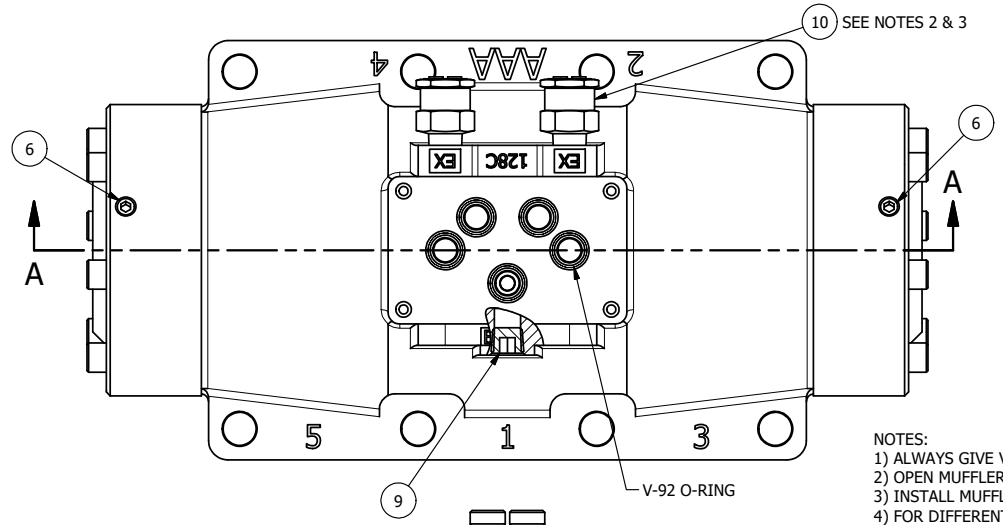

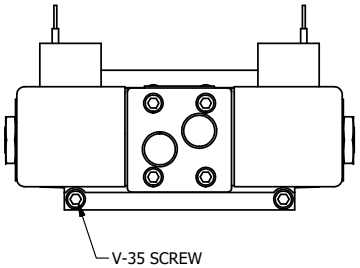

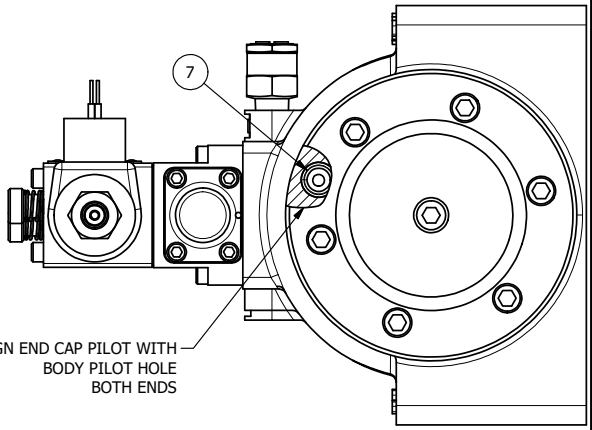

NOTES:
1) ALWAYS GIVE VALVE MODEL AND PART NUMBER WHEN ORDERING.
2) OPEN MUFFLER 2 TURNS FROM CLOSED POSITION. TIGHTEN LOCK NUT ON MUFFLER.
3) INSTALL MUFFLER WITH MAGNALUBE-G GREASE 1 TO 1-1/2 TURNS FROM HAND TIGHT INTO BODY.
4) FOR DIFFERENT VOLTAGES OTHER THAN 120/60, REPLACE TOP CONTROL VALVE WITH VALVE LISTED IN TABLE BELOW.

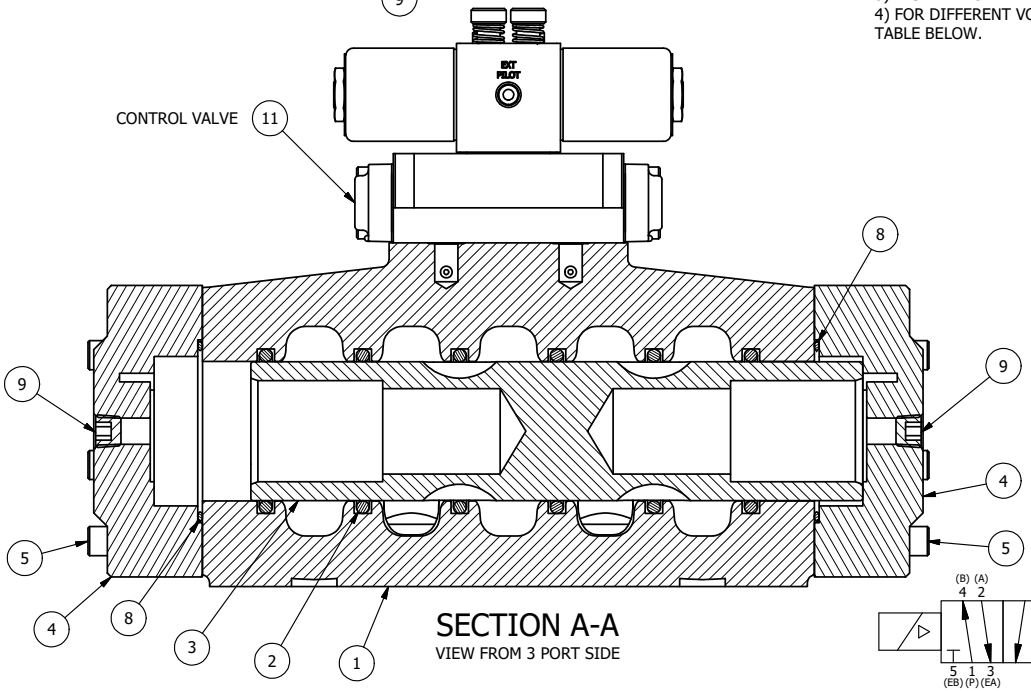

SECTION A-A
VIEW FROM 3 PORT SIDE

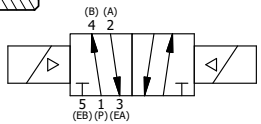

OPERATOR VOLTAGES	
PART NO	REPLACE WITH
SS16POPT 12VDC	SS3POPT 12VDC
SS16POPT 24VDC	SS3POPT 24VDC
SS16POPT 240/60	SS3POPT 240/60

THE FOLLOWING PARTS ARE INCLUDED WITH THE SUBPLATE VALVE AND ARE USED TO ASSEMBLE.

QTY	PART NO	DESCRIPTION
5	V-92	O-RING, BUNA-N, 70 DURO, AS-014, (REF 1/2 X 5/8 X 1/16), 3/8" SUBPLATE
4	V-35	SCREW, 10-24 X 7/8, SOCKET HEAD CAP

FLG	QTY	PART NO	DESCRIPTION
12	1	SPK-16	KIT - SUBPLATE MOUNT, 2" SUBPLATE VALVES
11	1	SS3POPT	3/8" SUBPLATE, DBL SOL, 2 POS, SOL RTRN, CLASSIC SOL, 120/60, PUSH OVRD, TPD VENT
10	2	MFC2	ASSEMBLY - MUFFLER FLOW CONTROL, 1/4" NPT
9	3	V-337	PLUG, SOCKET 1/4-18 FLUSH SEAL PLUG
8	2	V-124	O-RING, BUNA-N, 70 DURO, AS-231, (REF 2-5/8 X 2-7/8 X 1/8), 2 POS, 1-1/2" & 2" VALVES
7	2	V-89	O-RING, BUNA-N, 70 DURO, AS-110, (REF 3/8 X 9/16 X 3/32), 1" & 2" SUBPLATE PILOT
6	2	V-231	PLUG, SOCKET PRESSURE 1/16-27X 7/8 TAPER FOR 122V,192V,FOR EC
5	12	V-143	SCREW, 5/16-18 X 2, SOCKET HEAD CAP
4	2	PEC12E	ENDCAP - PILOT, SOLID, 6061-T6 AL, 1-1/2" & 2" VALVES
3	1	S12	SPOOL - STANDARD, 2 POS - 3 POS CLOSED CTR, 1 1/2" & 2" VALVE
2	6	V-123	O-RING, BUNA-N, 70 DURO, AS-331, (REF 2-1/4 X 2-5/8 X 3/16), 1-1/2" & 2" VALVES
1	1	BP16-6	BODY, 2" SUBPLATE, PIGGY BACK

LIMITS ON DIMENSIONS UNLESS OTHERWISE SPECIFIED
2-PL DECIMAL ± .01
3-PL DECIMAL ± .005
FRACTIONAL ± 1/64
ANGULAR ± 1/2'

AAA PRODUCTS INTERNATIONAL
7114 Harry Hines Blvd
Dallas, TX 75235

DRAWN: RMcKenna DATE: 2/5/2020
CHECKED: KWaite DATE: 2/5/2020
SCALE: 1/2 SHEET: 1 OF 1
RELEASED: HWomack DATE: 2/5/2020

TITLE: 2" SUBPLATE, DBL SOL, 2 POS, SOL RTN, CLASSIC, 120/60, PUSH OVRD, TPD VENT

PART NO.: SS16POPT

REV.:

D:\Engineering\Product\Valve\Assembly\Classic\SS3\SS16POPT.dw

THE INFORMATION CONTAINED WITHIN THIS DOCUMENT IS PROPRIETARY TO AAA PRODUCTS AND MAY NOT BE DISCLOSED WITHOUT PRIOR WRITTEN CONSENT