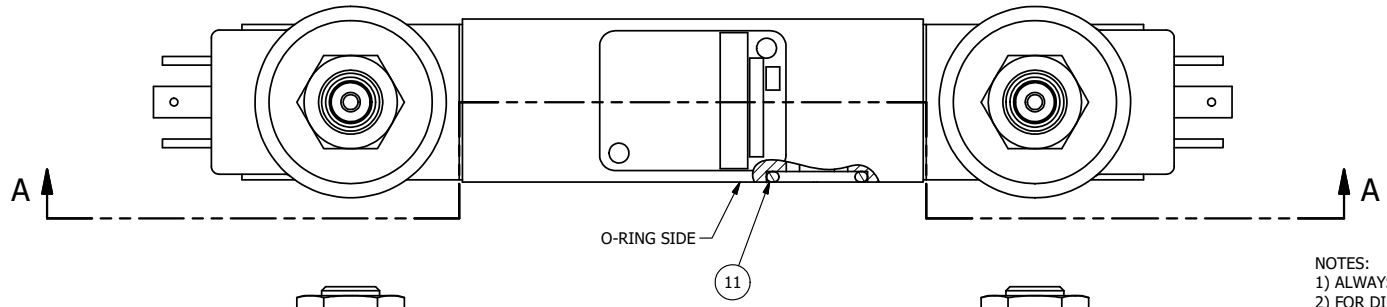

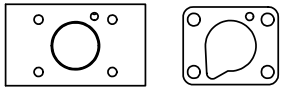

POSITION GASKET ON END OF VALVE
TO ALIGN PILOT HOLES,
BOTH ENDS (SIDE 'B' SHOWN)

NOTES:
1) ALWAYS GIVE VALVE MODEL AND PART NUMBER WHEN ORDERING PARTS.
2) FOR DIFFERENT VOLTAGES OTHER THAN 120/60, REPLACE SOLENOID OPERATOR WITH OPERATOR LISTED IN TABLE BELOW. REFERENCE AY-38EDT DRAWING FOR REPLACEMENT COILS.

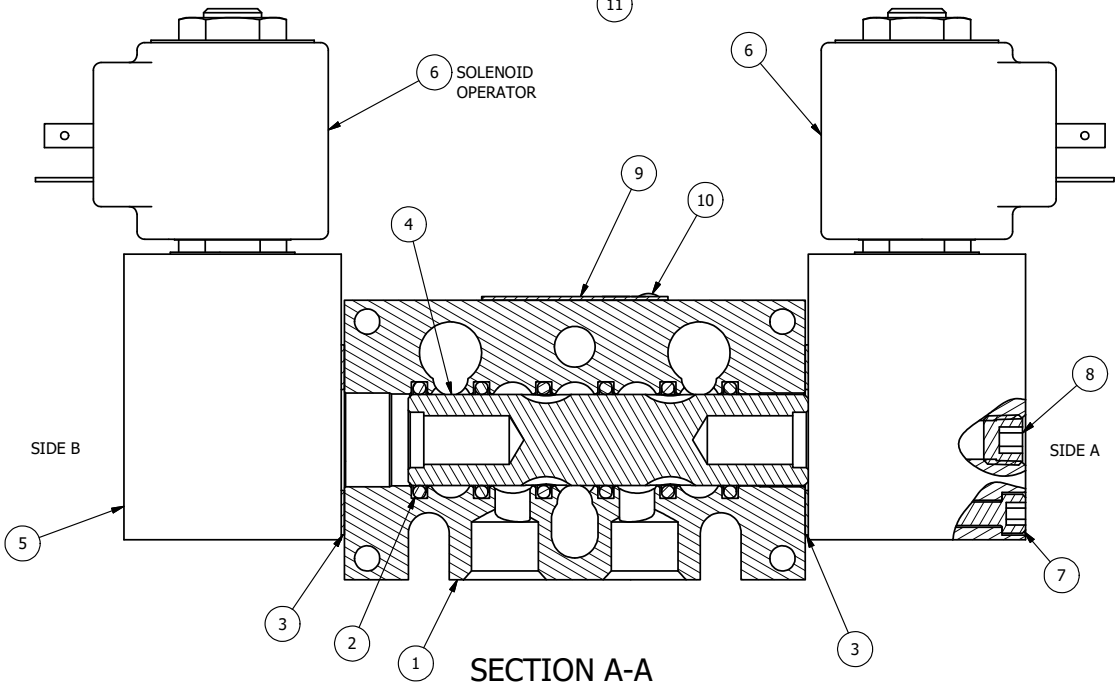

SECTION A-A
VIEW FROM O-RING SIDE

FLG	QTY	PART NO	DESCRIPTION
11	3	V-110	O-RING, BUNA-N, 70 DURO, AS-114, (REF 5/8 X 13/16 X 3/32), 1/4" SLEEVE, 1/2" SUB, STACK
10	2	V-212	SCREW, #2 X 3/16 DRIVE, TYPE U, OVAL HEAD, STAINLESS STEEL
9	1	AN-115	NAMEPLATE, BLANK, FOR HE,KE,KD,RR,D,CR,PP,SR,SS VALVES
8	2	V-19	PLUG, SOCKET PIPE 1/8" NPT (#601-3 PITTSBURG PLUG PART #.)
7	8	V-1	SCREW, 10-24 X 2, SOCKET HEAD CAP
6	2	AY-38EDT-11	CLASSIC SOLENOID - ISO 4400 DIN, 1/8" NPTF SOL EXHST, 120/60
5	2	PB3-5E	ADAPTOR - SOLENOID, SINGLE PILOT, 1/4" & 3/8" STACKING VALVE
4	1	S3R	SPOOL - SOLID, STANDARD, 2 POS, CLSD CTR, 1/4" & 3/8" VALVE
3	2	ECG3	GASKET - END CAP, 1/4" & 3/8" VALVE
2	6	V-39	O-RING, VITON, STD BODY, 1/4" & 3/8" VALVES
1	1	B3-10E	FINISHED - SOLID BODY, UPPER PILOTS, 3/8" STACKING VALVE

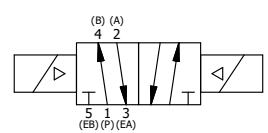

OPERATOR VOLTAGES	
PART NO	REPLACE OPERATOR
BSS3EDT 240/60	AY-38EDT-17
BSS3EDT 24VDC	AY-38EDT-8
BSS3EDT 12VDC	AY-38EDT-5

LIMITS ON DIMENSIONS UNLESS OTHERWISE SPECIFIED
2-PL DECIMAL ± .01
3-PL DECIMAL ± .005
FRACTIONAL ± 1/64
ANGULAR ± 1/2°

AAA PRODUCTS INTERNATIONAL
7114 Harry Hines Blvd
Dallas, TX 75235

DRAWN: RMcKenna DATE: 3/3/2016
CHECKED: KWaite DATE: 3/3/2016
SCALE: 1 : 1 SHEET: 1 OF 1
RELEASED: HWomack DATE: 3/3/2016

TITLE: 3/8" STACK, DBL SOL, 2 POS, FRICTION POS, SOL RTRN, ISO 4400 DIN, 120/60, TAPPED VENT

PART NO.: BSS3EDT

REV.:

THE INFORMATION CONTAINED WITHIN THIS DOCUMENT IS PROPRIETARY TO AAA PRODUCTS AND MAY NOT BE DISCLOSED WITHOUT PRIOR WRITTEN CONSENT

D:\Engineering\Product\Valve\Assembly\Classic\SS\DWG\BSS3EDT.idw