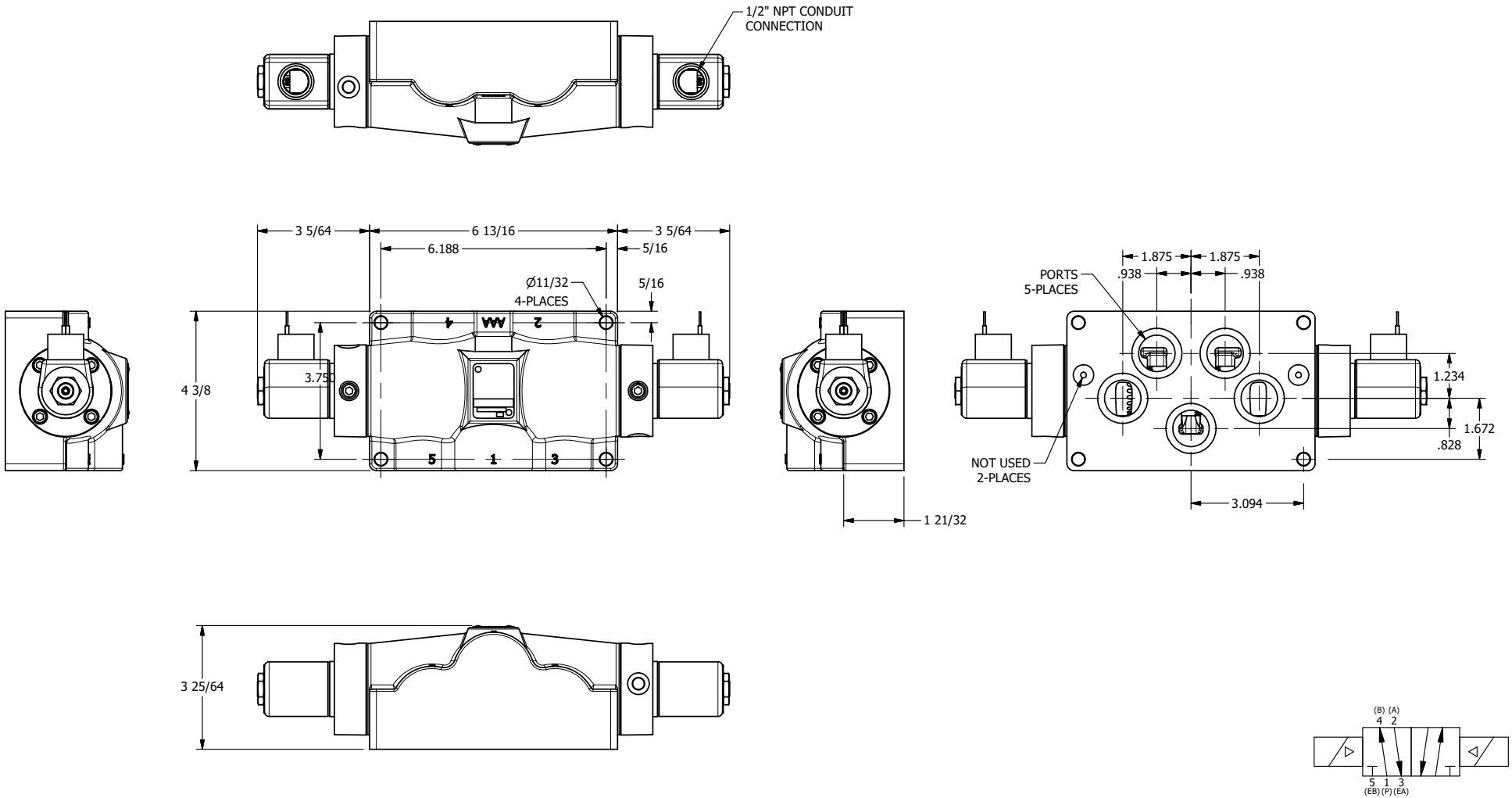

AAA PRODUCTS INTERNATIONAL
7114 Harry Hines Blvd
Dallas, TX 75235

TITLE: 1" SUBPLATE, DBL SOL, 2 POS, FRICTION POS, SOL RTRN, CLASSIC SOL, 300 PSI

DRAWING NO.: DIM_SS8PV

THE INFORMATION CONTAINED WITHIN THIS DOCUMENT IS PROPRIETARY TO AAA PRODUCTS AND MAY NOT BE DISCLOSED WITHOUT PRIOR WRITTEN CONSENT