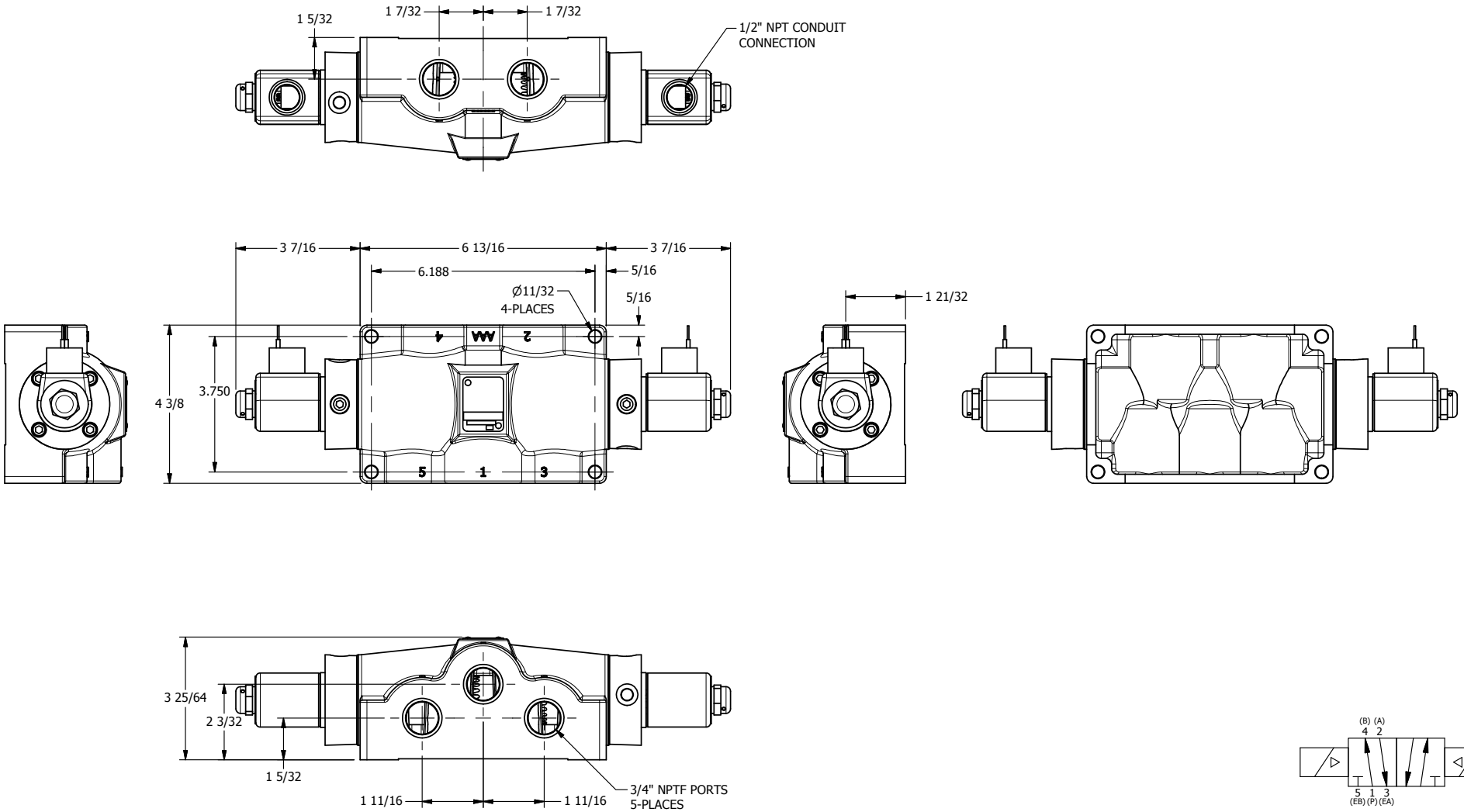

AAA PRODUCTS INTERNATIONAL
7114 Harry Hines Blvd
Dallas, TX 75235

TITLE: 3/4" SIDE PORT, DBL SOL, 2 POS, FRICTION POS, SOL RTRN, CLASSIC SOL, DUST EXCLDR

DRAWING NO.: DIM_SS6L

THE INFORMATION CONTAINED WITHIN THIS DOCUMENT IS PROPRIETARY TO AAA PRODUCTS AND MAY NOT BE DISCLOSED WITHOUT PRIOR WRITTEN CONSENT